LEDGER M AEC

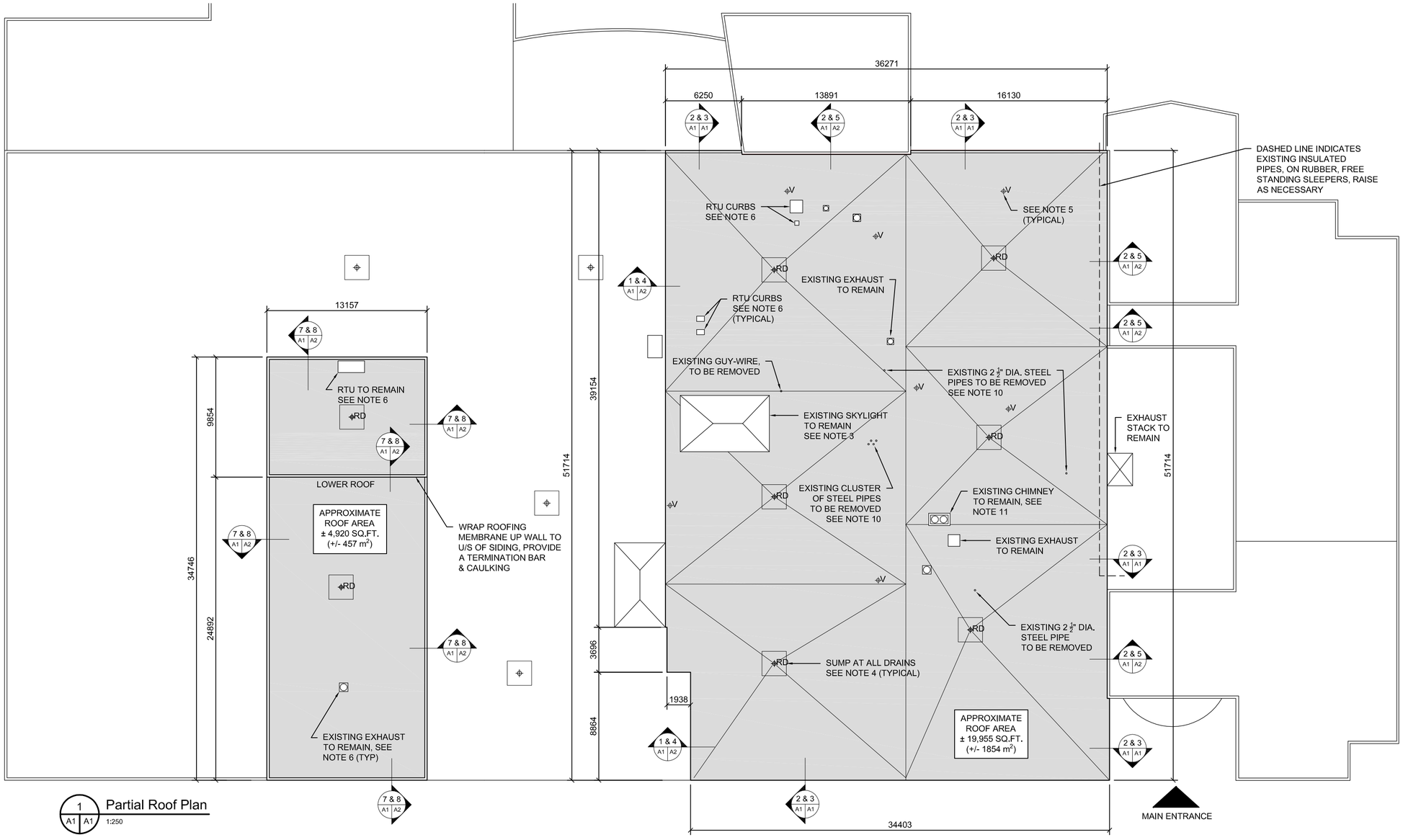

1 A1 A1 Partial Roof Plan
1:250

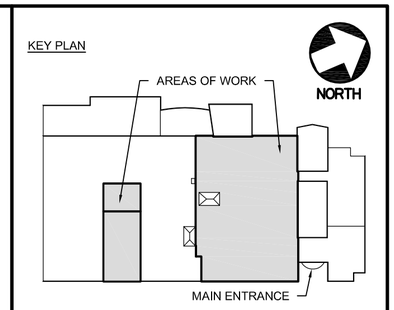

GENERAL NOTES:

1. ALL DIMENSIONS & SITE CONDITIONS ARE TO BE CONFIRMED ON SITE BY THE CONTRACTOR. CONTRACTOR RESPONSIBLE TO VISIT THE SITE PRIOR TO SUBMITTING A TENDER AND MAKE THEMSELVES FAMILIAR WITH CONDITIONS THAT MAY AFFECT THE WORK.
2. CONTRACTOR TO REPAIR EXISTING ROOFING MEMBRANE AT ALL LOCATIONS WHERE WATER INFILTRATION MAY BE EVIDENT.
3. ALL ROOF CURBS TO BE A MIN. 100mm ABOVE NEW ROOF. CONTRACTOR RESPONSIBLE FOR IDENTIFYING CURBS NEEDING TO BE RAISED. ALL MECHANICAL AND ELECTRICAL COMPONENTS INVOLVED WITH RAISING CURBS TO BE COMPLETED BY A LICENSED CONTRACTOR IN THE APPROPRIATE DISCIPLINE.
4. EXISTING ROOF DRAINS TO BE REPLACED WITH NEW DRAINS AND RAISED UP TO HEIGHT OF NEW ROOF. PROVIDE 25mm X 610mm x 610mm SQUARE SUMP AT DRAIN LOCATIONS.
5. EXISTING PLUMBING VENTS TO BE REPLACED. TYPICAL
6. EXISTING MECHANICAL EXHAUST FANS AND ROOF TOP UNITS TO REMAIN UNLESS OTHERWISE NOTED. INSTALL CAP SHEET FLASHING TO CURBS. CAULK PERIMETER. RAISE CURBS AS REQUIRED.
8. REMOVE ALL UNNECESSARY DEBRIS FROM ROOF TOP. TYPICAL.
9. CONTRACTOR TO ENSURE ALL ROOF DRAINS & LINES ARE CLEAR OF OBSTRUCTIONS AND DRAINING WATER. NOTIFY TIE IF THERE ARE POTENTIAL BLOCKAGES IN THE LINES.
10. CUT OFF ALL STEEL PIPES TO LEVEL, FLUSH WITH EXISTING MEMBRANE. PATCH WITH NEW BASE SHEET & LIQUID ASPHALT AS REQUIRED.
11. REMOVE RUSTED METAL SHROUD SURROUNDING EXISTING CHIMNEY BASE. PROVIDE MODIFIED FLASHING AT BASE.

LEGEND:

- RD ROOF DRAIN
- V VENT STACK
- EXHAUST FAN
- ROOF TOP UNIT

APPROX. AREA OF ROOF REPAIR: 24,875 ft²

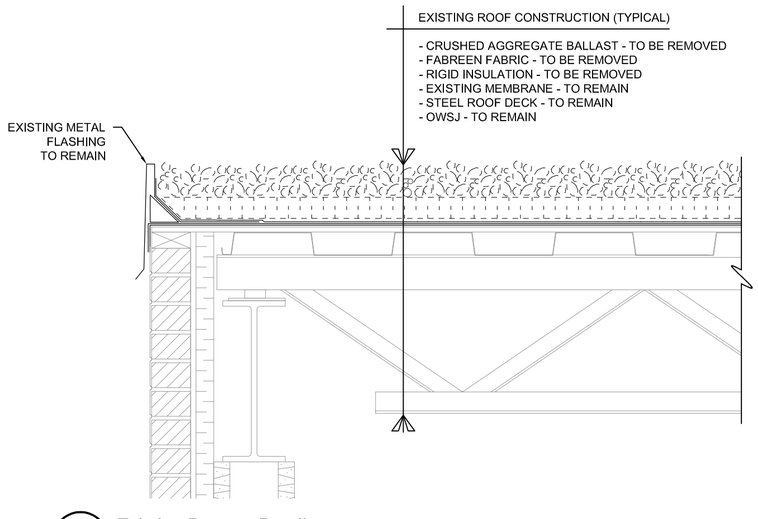

2 A1 A1 Existing Parapet Detail
1:250

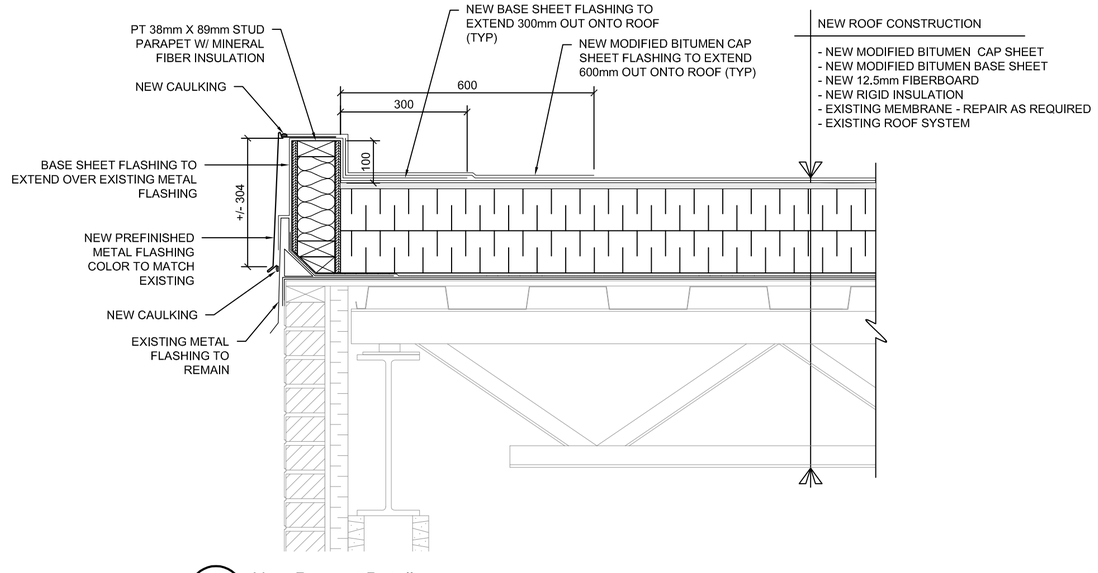

3 A1 A1 New Parapet Detail
1:250

ISSUED FOR TENDER
12/17/19 by RPM

Prince Edward Island CANADA
Transportation, Infrastructure and Energy
Tel 902 368 5100
Fax 902 569 0590
http://www.gov.pe.ca/
PO Box 2000
Charlottetown
Prince Edward Island
Canada C1A 7N8

Project Title :
Bluefield High School Partial Roof Replacement

Drawing Title :
Partial Roof Plan & Details

Scale : 1:200	Design By : RPM
Drawn By : JDM	Date : December 2019
Project No.: 070-19075	Drawing No.: A1 of 2

G:\BLDG ASSET\070 BLUEFIELD\19075 PARTIAL ROOF REPLACEMENT\04 PLANS & DRAWINGS\TIE DWGS\070-19075 - PARTIAL ROOF PLAN.DWG

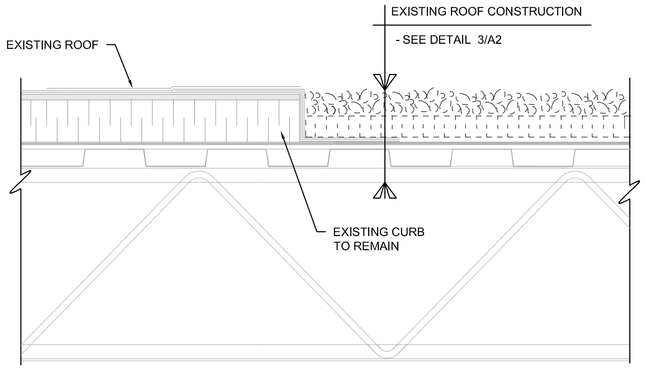

1 A1 A2 Existing Curb Detail
1:10

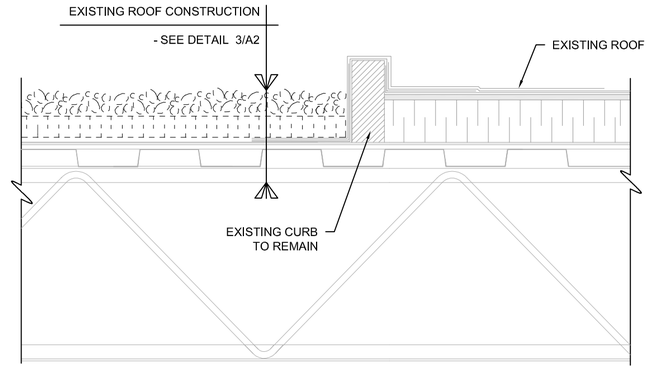

2 A1 A2 Existing Curb Detail
1:10

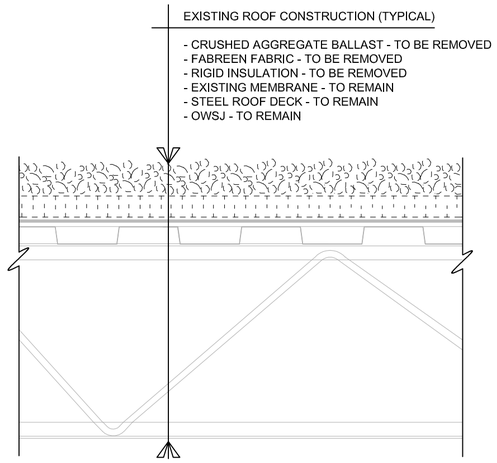

3 A1 A2 Existing Roof Detail
1:10

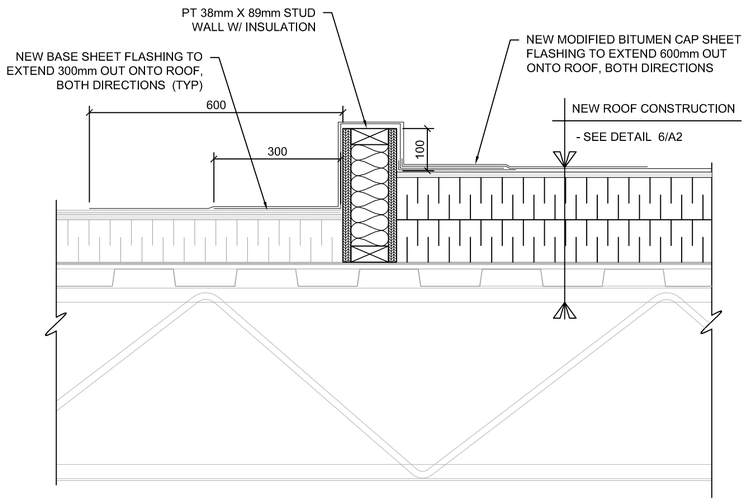

4 A1 A2 New Curb Detail
1:10

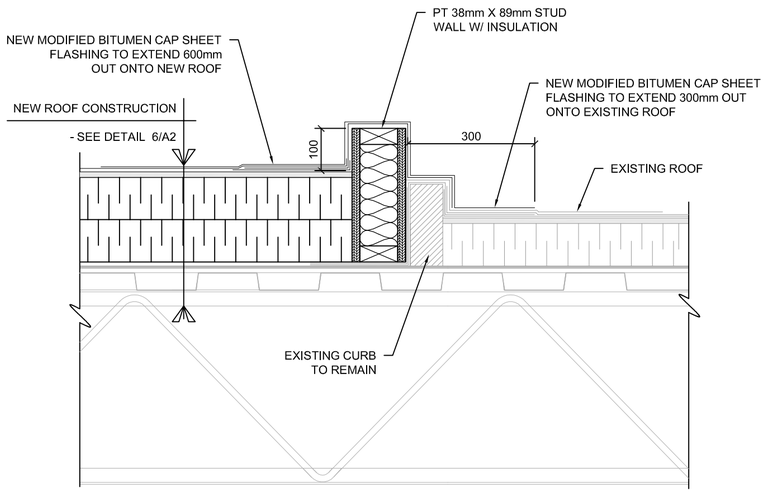

5 A1 A2 New Curb Detail
1:10

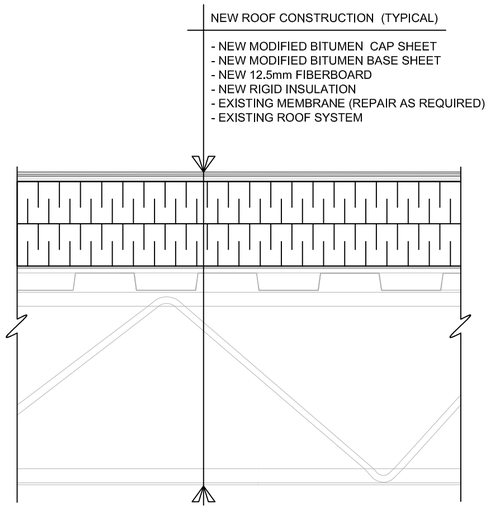

6 A1 A2 New Roof Detail
1:10

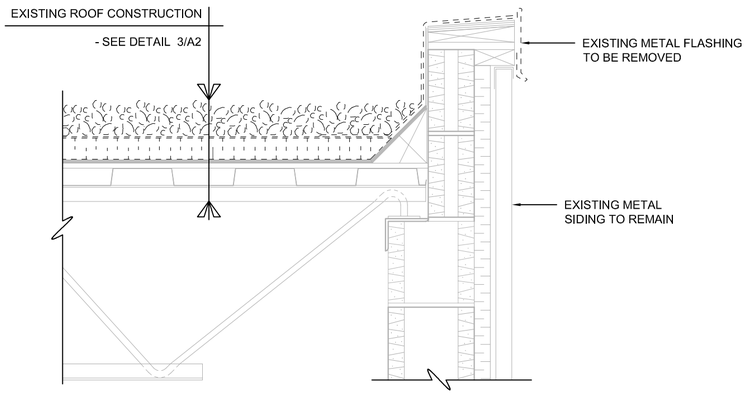

7 A1 A2 Existing Parapet Detail
1:10

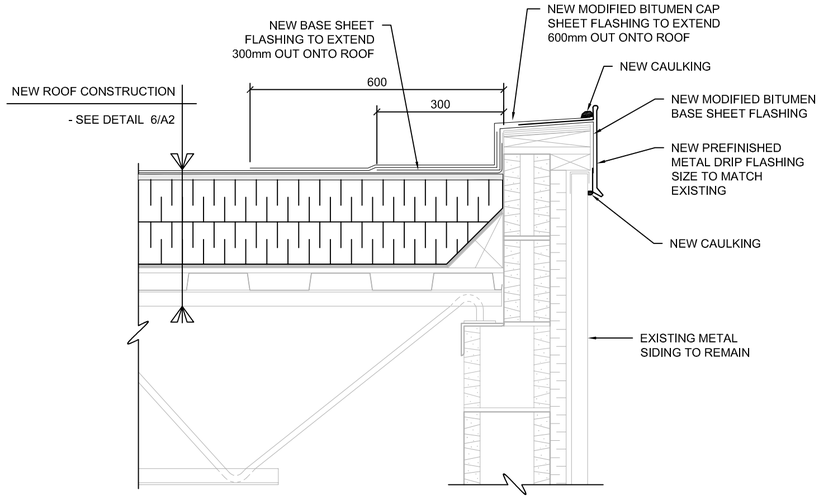

8 A1 A2 New Parapet Detail
1:10

ISSUED FOR TENDER
12/17/19 by RPM

Prince Edward Island CANADA
Transportation, Infrastructure and Energy
Tel 902 368 5100
Fax 902 569 0590
http://www.gov.pe.ca/
PO Box 2000
Charlottetown
Prince Edward Island
Canada C1A 7N8

Project Title :
Bluefield High School
Partial Roof Replacement

Drawing Title :
Details

Scale : 1:200	Design By : RPM
Drawn By : JDM	Date : December 2019
Project No.: 070-19075	Drawing No.: A2 of 2

LEDGER M AEC

C:\SELDC ASSET\070 BLUEFIELD\19075 PARTIAL ROOF REPLACEMENT\04 PLANS & DRAWINGS\TIE DWG\20190307-19075 - PARTIAL ROOF PLANS.DWG