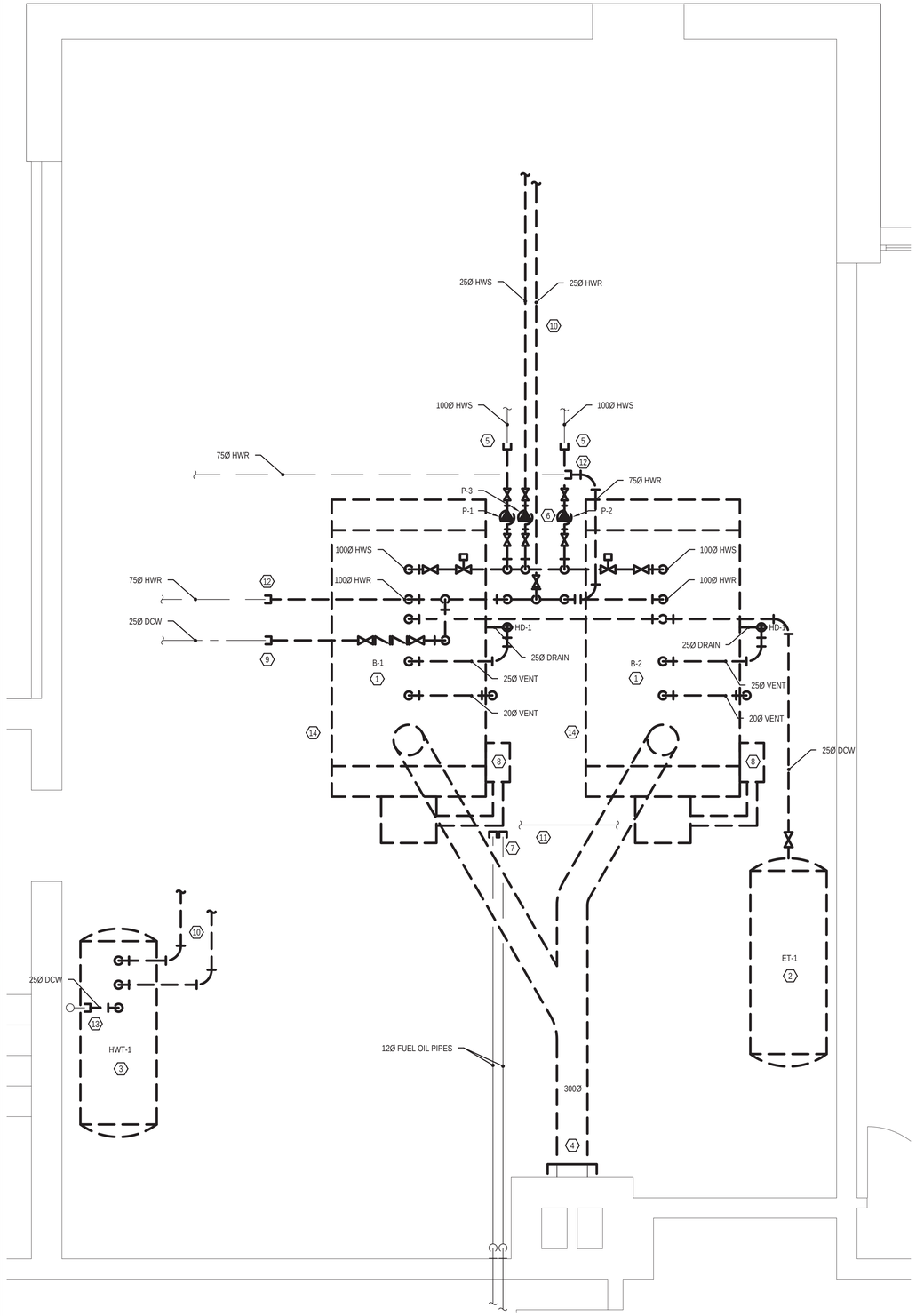

1 M-101 BOILER ROOM - DEMOLITION PLAN
SCALE: 1:25

HVAC LEGEND

UN-INSULATED NEW DUCTWORK	
INSULATED NEW DUCTWORK	
CEILING DIFFUSER *	
GRILLE OR REGISTER *	
GRILLE OR DIFFUSERS TAG -A- GRILLE OR DIFFUSER TYPE -B- AIR FLOW (CFM)	A B
EXHAUST OR RETURN AIR DUCTWORK UP	
EXHAUST OR RETURN AIR DUCTWORK DOWN	
SUPPLY AIR DUCTWORK UP	
SUPPLY AIR DUCTWORK DOWN	
RETURN AIR DUCTWORK UP	
RETURN AIR DUCTWORK DOWN	
DUCT TRANSITION (FROM RECTANGULAR TO ROUND)	
DUCT TRANSITION	
DUCT RISE OR DROP	UP DN
90° ELBOW	
90° ELBOW WITH TURNING VANES	
90° BRANCH DUCT BOOTH CONNECTION	
90° BRANCH DUCT FITTING CONNECTION	
DUCT AND PIPE CAP	
TEMPERATURE SENSOR	T

BALANCING DAMPER	BD
BACK DRAFT DAMPER	BDD
FIRE DAMPER	FD
MOTORIZED DAMPER	MD-*
AIR FLOW DIRECTION	
VARIABLE AIR VOLUME UNIT	VAV-*
THERMOSTAT	T
FLEX DUCTWORK	
EXISTING DUCTWORK, PIPING AND EQUIPMENT TO BE REMOVED	
EXISTING DUCTWORK, PIPING AND EQUIPMENT TO REMAIN	
NEW DUCTWORK, PIPING AND EQUIPMENT	
POINT OF CONNECTION	P.O.C.

PLUMBING LEGEND

SANITARY SEWER (ABOVE GRADE)	SAN
SANITARY SEWER (BELOW GRADE)	SAN
EXIS SANITARY SEWER (BELOW GRADE)	SAN
VENT PIPING	V
VENT PIPING (BELOW GRADE)	V
DOMESTIC COLD WATER (DCW)	
EXIS DOMESTIC COLD WATER (DCW)	
DOMESTIC COLD WATER (BELOW GRADE)	
DOMESTIC HOT WATER (DHW)	
FLOOR CLEAN OUT (BELOW SLAB)	CO
PIPE RISER DOWN	
PIPE RISER UP	
BALL VALVE	
P-TRAP	
FLOOR DRAIN	FD-*
HUB DRAIN	HD-*

HYDRONIC LEGEND

HOT WATER SUPPLY	HWS
HOT WATER RETURN	HWR
CIRCUIT SETTER W/ STRAINER	
CHECK VALVE	
PUMP	
STRAINER	
ISOLATION VALVE	
CONTROL VALVE	
THERMOMETER	TH

GENERAL NOTES:

1. CONTRACTOR TO SITE VERIFY EXACT LOCATION AND SIZE OF EXISTING MECHANICAL EQUIPMENT, DUCTS AND PIPES PRIOR TO WORK.
2. CONTRACTOR TO COORDINATE WITH OWNER FOR SHUTTING DOWN OF EXISTING MECHANICAL SYSTEMS.
3. ALL PLUMBING WORK SHALL BE DONE IN ACCORDANCE WITH THE NATIONAL PLUMBING CODE OF CANADA, 2015.

DEMOLITION NOTES:

1. EXISTING BOILER AND ALL ASSOCIATED PIPING, ELECTRICAL POWER AND CONTROL WIRING TO BE REMOVED.
2. EXISTING EXPANSION TANK AND ALL ASSOCIATED PIPING TO BE REMOVED.
3. EXISTING DOMESTIC WATER TANK AND ALL ASSOCIATED PIPING TO BE REMOVED.
4. EXISTING BREECHING TO BE REMOVED; CUT AND CAP AT THE EXISTING CHIMNEY FOR RECONNECTION OF NEW BREECHING.
5. CUT AND CAP EXISTING HWS PIPING FOR RECONNECTION TO NEW HWS PIPING.
6. EXISTING CIRCULATOR AND ALL ASSOCIATED ELECTRICAL POWER AND CONTROL WIRING TO BE REMOVED.
7. CUT AND CAP EXISTING FUEL OIL TUBES FOR RECONNECTION TO NEW BOILER.
8. EXISTING FUEL OIL FILTER AND TIGERLOOP DEAERATOR TO BE REMOVED.
9. CUT AND CAP EXISTING MAKE UP WATER PIPING FOR RECONNECTION TO NEW EXPANSION TANK.
10. EXISTING HWS AND HWR PIPING TO THE DOMESTIC WATER TANK TO BE REMOVED.
11. EXISTING FUEL OIL PIPING TO REMAIN.
12. CUT AND CAP EXISTING HWR PIPING IN CEILING FOR CONNECTION TO NEW HWR PIPING.
13. CUT AND CAP EXISTING DCW PIPING BACK IN CEILING FOR RECONNECTION TO NEW DHW HEATER
14. EXISTING HOUSEKEEPING PAD TO BE REMOVED; PATCH AND REPAIR FLOOR SLAB TO MATCH EXISTING.

WSP Canada Inc.
1 Spectacle Lake Drive
Dartmouth, Nova Scotia, Canada B3B 1X7
T 902-835-9955 F 902-835-1645 www.wsp.com

DESCRIPTION	NO.	DATE
ISSUED FOR TENDER	2	2020.05.21
ISSUED FOR 99% REVIEW	1	2020.05.08

REVISIONS

SEAL

THE ASSOCIATION OF PROFESSIONAL ENGINEERS OF THE PROVINCE OF PRINCE EDWARD ISLAND VALID FOR THE YEAR 2020
Matthew Rodgers
No. 1906
DATE: 2020/05/21
LICENSED PROFESSIONAL ENGINEERS PROVINCE OF PRINCE EDWARD ISLAND

PROJECT :
PEI BELFAST CONSOLIDATED SCHOOL BOILER REPLACEMENT

TIE PROJECT : 040-20018

DRAWING TITLE :
BOILER ROOM - DEMOLITION PLAN

SCALE: AS NOTED	DATE: 2020/05/08
APPROVED BY: M.R.	CHECKED BY: J.Z.
DRAWN BY: A.T.	PROJECT #: 201-03997-00

SHEET No.: M-101

Drawing name: K:\Dartmouth\Buildings\03201201-03997-00 PEI Belfast Consolidated School Boiler\03 Drawing\15 Mechanical\M-101 - Mechanical.dwg

May 21, 2020 - 9:42am

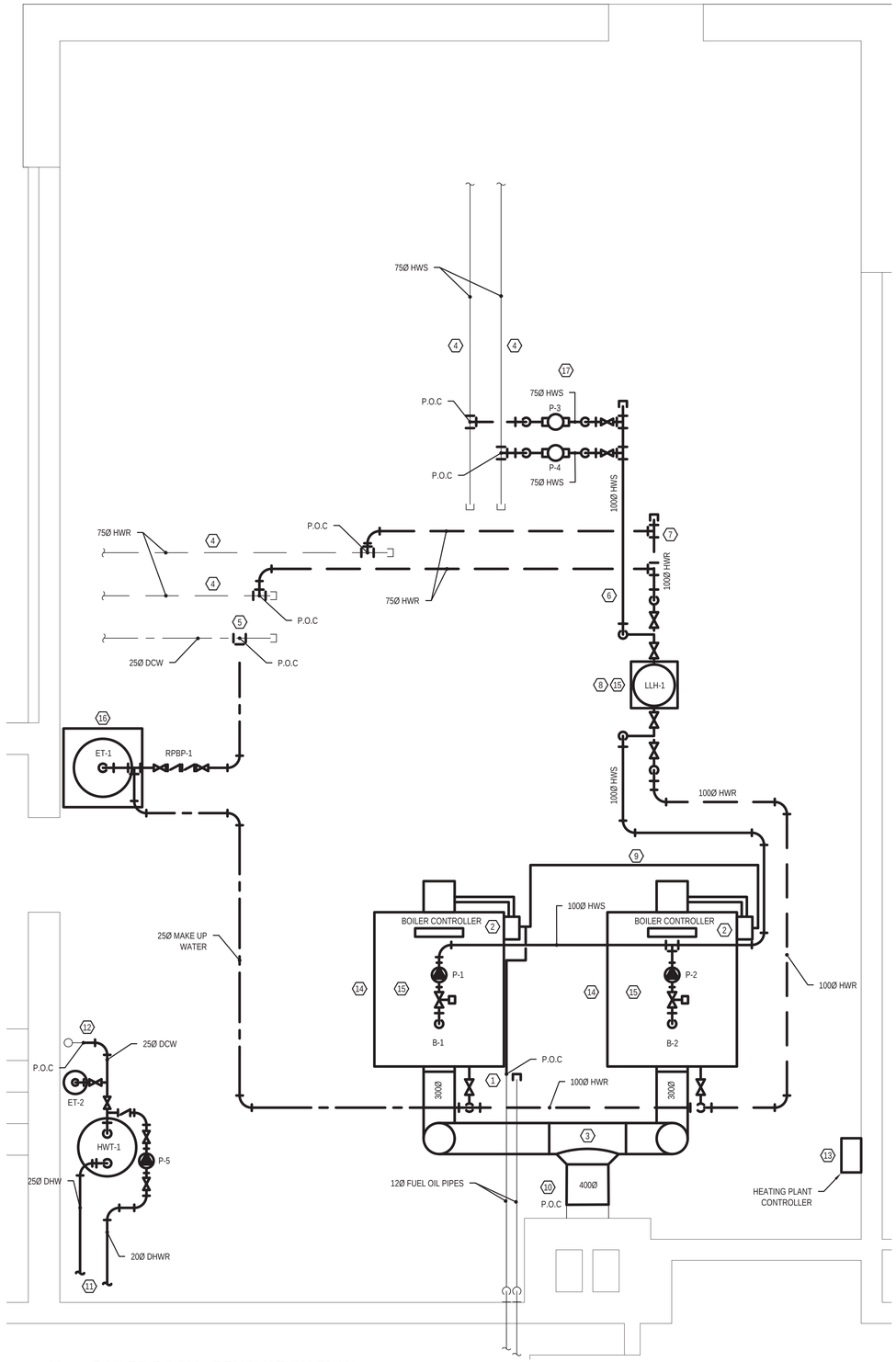

1 M-102 BOILER ROOM - RENOVATION PLAN
SCALE: 1:25

RENOVATION NOTES:

1. CONNECT TO EXISTING FUEL OIL SUPPLY.
2. PROVIDE NEW TIGERLOOP DEAERATOR AND FILTER.
3. RUN NEW BREECHING IN CEILING; CONNECT THE NEW BREECHING TO EXISTING CHIMNEY.
4. EXISTING HWS/ HWR PIPING IN CEILING.
5. EXISTING DCW PIPING IN CEILING.
6. NEW HWS HEADER.
7. NEW HWR HEADER.
8. INSTALL LLH-1 AND ET-1 ON FLOOR; PROVIDE 100MM HIGH HOUSEKEEPING PAD.
9. NEW FUEL OIL TUBES.
10. EXISTING CHIMNEY.
11. CONNECT NEW DHW AND DHWR PIPES TO EXISTING PIPES IN CEILING.
12. CONNECT NEW DCW PIPE TO EXISTING DCW PIPE IN CEILING.
13. INSTALL NEW HEATING PLANT CONTROLLER ON THE WALL 1500MM AFF.
14. PROVIDE NEW 100MM HIGH HOUSEKEEPING PAD FOR NEW BOILER.
15. RELIEF PIPING TO BE DRAINED TO NEAREST HUB FLOOR DRAIN.
16. INSTALL NEW ET-1 ON FLOOR; PROVIDE 100MM HIGH HOUSEKEEPING PAD.
17. P-3 AND P-4 TO BE INSTALLED ON FLOOR; PROVIDE 100MM HIGH HOUSEKEEPING PAD.

WSP Canada Inc.
1 Spectacle Lake Drive
Dartmouth, Nova Scotia, Canada B3B 1X7
T 902-835-9955 F 902-835-1645 www.wsp.com

DESCRIPTION	NO.	DATE
ISSUED FOR TENDER	2	2020.05.21
ISSUED FOR 99% REVIEW	1	2020.05.08

REVISIONS

SEAL

THE ASSOCIATION OF PROFESSIONAL ENGINEERS OF THE PROVINCE OF PRINCE EDWARD ISLAND VALID FOR THE YEAR 2020
Matthew Rodgers
No. 1906
DATE: 2020/05/21
LICENSED PROFESSIONAL ENGINEERS PROVINCE OF PRINCE EDWARD ISLAND

PROJECT :
PEI BELFAST CONSOLIDATED SCHOOL BOILER REPLACEMENT

TIE PROJECT : 040-20018

DRAWING TITLE :
BOILER ROOM - RENOVATION PLAN

SCALE:	DATE:
AS NOTED	2020/05/08
APPROVED BY: M.R.	CHECKED BY: J.Z.
DRAWN BY: A.T.	PROJECT #: 201-03997-00

SHEET No.: M-102

Drawing name: R:\Dartmouth\Buildings\2020\201-03997-00_PEI_Belfast_Consolidated_School_Board\3.0_Drawings\3.4_Mechanical\3.4.1_Working\201-03997_Mechanical.dwg

May 21, 2020 – 9:42am

APPLICATIONS:

1. HOT PIPING LESS THAN 32mm, STEEL & COPPER WITH LESS THAN 25mm HORIZONTAL MOVEMENT DUE TO THERMAL EXPANSION.

2. HOT PIPING LESS THAN 32mm, STEEL & COPPER WITH MORE THAN 300mm HANGER ROD ATTACHMENT.

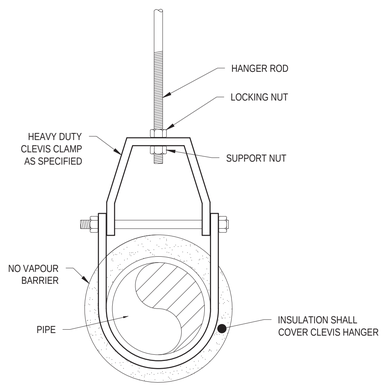

APPLICATIONS:

1. UNINSULATED PIPE

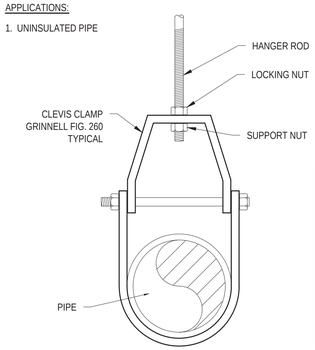

PIPE SIZE ø	ROD ø	MAX LOAD (KG)
UP TO 50mm	10mm	112
62 TO 75mm	12mm	158
100mm	16mm	180
150 TO 200mm	19mm	405

APPLICATIONS:

1. COLD PIPING LESS THAN 32mm, STEEL & COPPER.

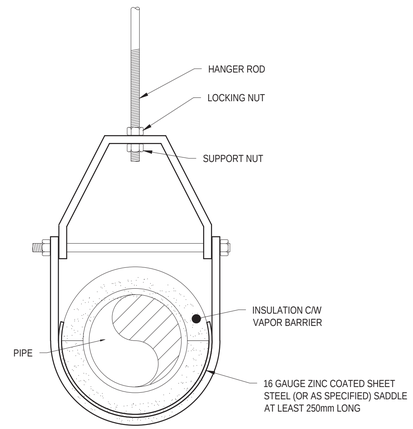

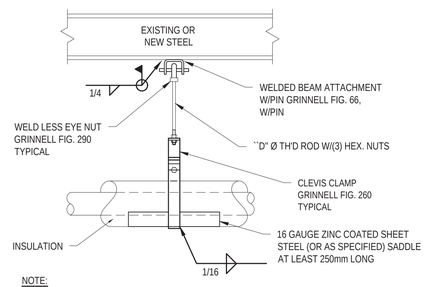

NOTE:

1. WHERE STRUCTURE ABOVE IS CONCRETE USE HILTI DROP-IN ANCHOR (HDI) IN PLACE OF WELDED BEAM ATTACHMENT.

2. WHERE ROD LENGTH EXCEED 1820mm PROVIDE TURNBUCKLE (GRINNELL FIG. 230) FOR ADJUSTING.

1 M-103 PIPE SUPPORT ARRANGEMENT DETAIL
N.T.S.

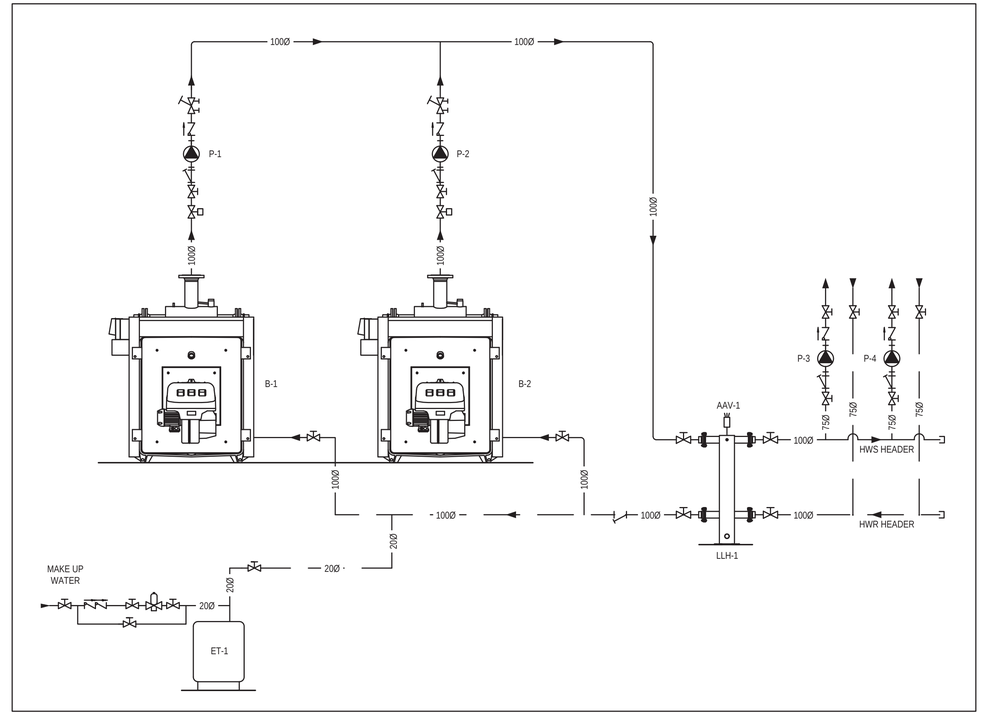

2 M-103 HYDRONIC HEATING PIPING SYSTEM FLOW DIAGRAM
N.T.S.

NOTES:
1. LLH-1 TO BE SUPPLIED WITH BOILERS.
2. AAV-1 TO BE SUPPLIED WITH LLH-1.

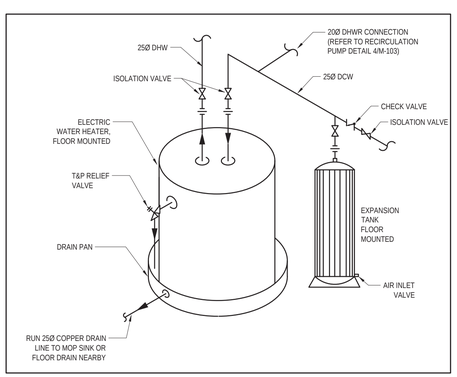

3 M-103 HOT WATER TANK DETAIL
N.T.S.

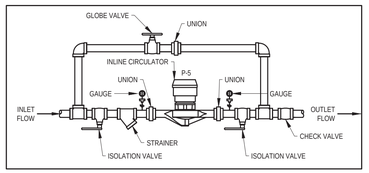

4 M-103 RECIRCULATOR PUMP DETAIL
N.T.S.

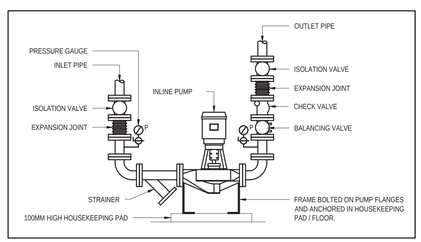

5 M-103 VERTICAL IN-LINE PUMP DETAIL
N.T.S.

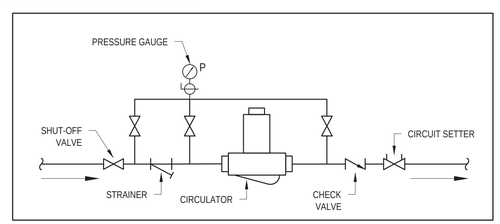

6 M-103 IN-LINE CIRCULATOR PIPING DETAIL
N.T.S.

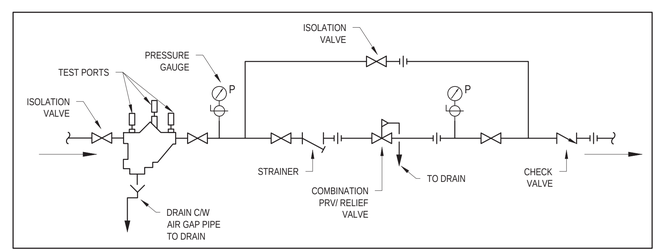

7 M-103 MAKE UP WATER PIPING DETAIL
N.T.S.

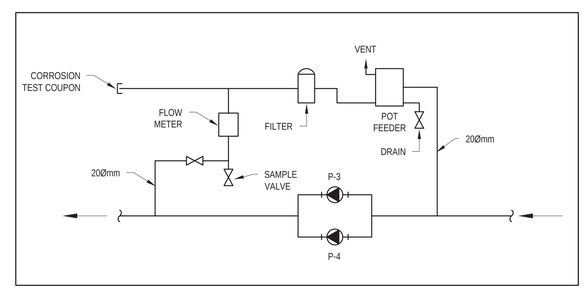

8 M-103 CHEMICAL POT FEEDER FOR CLOSED HYDRONIC SYSTEM DETAIL
N.T.S.

WSP Canada Inc.
1 Spectacle Lake Drive
Dartmouth, Nova Scotia, Canada B3B 1X7
T 902-835-9955 F 902-835-1645 www.wsp.com

ISSUED FOR TENDER	2	2020.05.21
ISSUED FOR 99% REVIEW	1	2020.05.08
DESCRIPTION	NO.	DATE

REVISIONS

SEAL

THE ASSOCIATION OF PROFESSIONAL ENGINEERS OF THE PROVINCE OF PRINCE EDWARD ISLAND
VALID FOR THE YEAR 2020
Matthew Rodgers
No. 1906
DATE: 2020/05/21
LICENSED PROFESSIONAL ENGINEERS PROVINCE OF PRINCE EDWARD ISLAND

PROJECT :
PEI BELFAST CONSOLIDATED SCHOOL BOILER REPLACEMENT

TIE PROJECT : 040-20018

DRAWING TITLE :
DETAILS AND DIAGRAMS

SCALE: AS NOTED	DATE: 2020/05/08
APPROVED BY: M.R.	CHECKED BY: J.Z.
DRAWN BY: A.T.	PROJECT #: 201-03997-00

SHEET No.:
M-103

Drawing name: K:\Dartmouth\Buildings\03201\201-03997-00 PEI Belfast Consolidated School Board\5.0 Drawings\5.4 Mechanical\5.4.1 Working\201-03997 Mechanical.dwg

May 21, 2020 – 9:43am

BOILER SCHEDULE

TAG	MANUFACTURER	MODEL NO.	INPUT	OUTPUT	COMBUSTION EFFICIENCY	NUMBER OF SECTIONS	SUPPLY OUTLET	RETURN INLET	FLUE GAS	DIMENSIONS (LxWxH)	WEIGHT
			(kW)	(kW)	(%)		(mm)	(mm)	(mm)	(mm)	(kg)
B-1	VIESSMANN	VITOROND 200 VD2 320	368	325	88.1	9	100	100	300	1490 x 1250 x 1290	1780
B-2	VIESSMANN	VITOROND 200 VD2 320	368	325	88.1	9	100	100	300	1490 x 1250 x 1290	1780

NOTES:
1. APPROVED ALTERNATIVES: BUDERUS, DEDIETRICH

DOMESTIC WATER RECIRCULATION PUMP SCHEDULE

TAG	TYPE	MANUFACTURER	MODEL NO.	FLOW RATE	PRESSURE	MOTOR		ELECTRICAL
				(L/s)	(kPa)	(HP)	(RPM)	VOLT/PH/HZ
P-5	IN-LINE CIRCULATOR	BELL & GOSSETT	PL-36	0.63	50	0.3	3300	120/1/60

NOTES:
1. APPROVED ALTERNATIVES: ARMSTRONG, GRUNDFOS.

IN-LINE PUMP SCHEDULE

TAG	TYPE	MANUFACTURER	MODEL NO.	FLOW RATE	PRESSURE	MOTOR		ELECTRICAL	REMARKS
				(L/s)	(kPa)	(HP)	(RPM)	VOLT/PH/HZ	
P-1	IN-LINE CIRCULATOR	BELL & GOSSETT	PD38	6.9	60	1.0	1725	120/1/60	PUMPS AND STARTER SUPPLIED WITH BOILERS
P-2	IN-LINE CIRCULATOR	BELL & GOSSETT	PD38	6.9	60	1.0	1725	120/1/60	PUMPS AND STARTER SUPPLIED WITH BOILERS

NOTES:
1. APPROVED ALTERNATIVES: ARMSTRONG, GRUNDFOS.

VERTICAL IN-LINE PUMP SCHEDULE

TAG	TYPE	MANUFACTURER	MODEL NO.	FLOW RATE	PRESSURE	MOTOR		ELECTRICAL	STARTER DATA
				(L/s)	(kPa)	(HP)	(RPM)	VOLT/PH/HZ	
P-3	VERTICAL IN-LINE	BELL & GOSSETT	E-80SC 2x2x9.5C	6.9	150	3.0	1800	120/1/60	VFD BY DIV. 25, WIRED BY DIV. 26
P-4	VERTICAL IN-LINE	BELL & GOSSETT	E-80SC 2x2x9.5C	6.9	150	3.0	1800	120/1/60	VFD BY DIV. 25, WIRED BY DIV. 26

NOTES:
1. APPROVED ALTERNATIVES: ARMSTRONG, GRUNDFOS.

HOT WATER TANK SCHEDULE

TAG	MANUFACTURER	MODEL NO.	CAPACITY	WATER CONNECTIONS		ELECTRICAL	
			(L)	DCW (mm)	DHW (mm)	(kW)	VOLT/PH/HZ
HWT-1	BRADFORD WHITE	M250S6DS	189	20	20	2 x 3.0	240/1/60

NOTES:
1. APPROVED ALTERNATIVES: A.O. SMITH, RHEEM

EXPANSION TANK SCHEDULE

TAG	MANUFACTURER	MODEL NO.	VOLUME	ACCEPTABLE VOLUME	DIMENSIONS		CONNECTION SIZE (mm)
			(L)	(L)	HEIGHT (mm)	DIAMETER (mm)	
ET-1	BELL & GOSSETT	B-300LA	300	100	1423	610	25
ET-2	BELL & GOSSETT	PTA-60V	95	50	864	413	20

NOTES:
1. APPROVED ALTERNATIVES: ARMSTRONG, AMTROL

WSP Canada Inc.
1 Spectacle Lake Drive
Dartmouth, Nova Scotia, Canada B3B 1X7
T 902-835-9955 F 902-835-1645 www.wsp.com

DESCRIPTION	NO.	DATE
ISSUED FOR TENDER	2	2020.05.21
ISSUED FOR 99% REVIEW	1	2020.05.08

REVISIONS

SEAL

THE ASSOCIATION OF PROFESSIONAL ENGINEERS OF THE PROVINCE OF PRINCE EDWARD ISLAND VALID FOR THE YEAR 2020

Matthew Rodgers
No. 1906

DATE: 2020/05/21

LICENSED PROFESSIONAL ENGINEERS PROVINCE OF PRINCE EDWARD ISLAND

PROJECT :

PEI BELFAST CONSOLIDATED SCHOOL BOILER REPLACEMENT

TIE PROJECT : 040-20018

DRAWING TITLE :

SCHEDULES

SCALE: AS NOTED	DATE: 2020/05/08
APPROVED BY: M.R.	CHECKED BY: J.Z.
DRAWN BY: A.T.	PROJECT #: 201-03997-00

SHEET No.:

M-104

Drawing name: X:\Dartmouth\Buildings\2020\201-03997-00 PEI Belfast Consolidated School Boiler\10 Drawings\14 Mechanical\14.1 Working\201-03997 Mechanical.dwg

May 21, 2020 - 9:43am

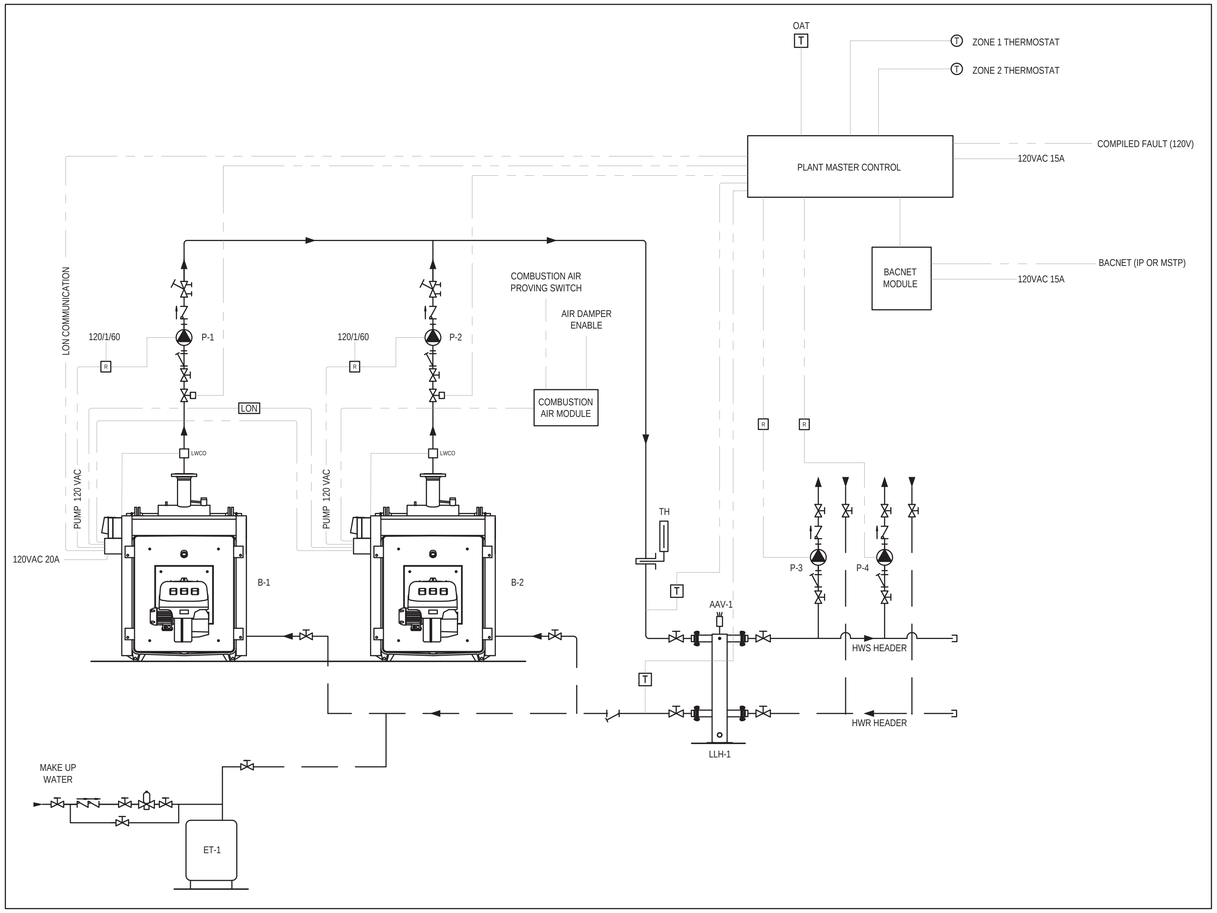

1 M-105 BOILER CONTROL SCHEMATIC

N.T.S.

NOTES:

1. BOILER MOUNTED CONTROLLERS AND PLANT CONTROLLER TO BE SUPPLIED WITH BOILERS.
2. ZONE THERMOSTATS AND CONTROL RELAYS FOR ZONE PUMPS TO BE PROVIDED BY DIV. 25.
3. ALL FIELD LOW VOLTAGE WIRING TO BE PROVIDED BY DIV. 25.
4. ELECTRICAL POWER WIRING TO CONTROLLERS, BOILERS AND PUMPS TO BE PROVIDED BY DIV. 26.

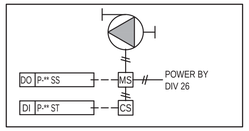

2 M-105 PUMP CONTROL SCHEMATIC

N.T.S.

WSP Canada Inc.
1 Spectacle Lake Drive
Dartmouth, Nova Scotia, Canada B3B 1X7
T 902-835-9955 F 902-835-1645 www.wsp.com

DESCRIPTION	NO.	DATE
ISSUED FOR TENDER	2	2020.05.21
ISSUED FOR 99% REVIEW	1	2020.05.08

REVISIONS

SEAL

THE ASSOCIATION OF PROFESSIONAL ENGINEERS OF THE PROVINCE OF PRINCE EDWARD ISLAND VALID FOR THE YEAR 2020

Matthew Rodgers
No. 1906

DATE: 2020/05/21

LICENSED PROFESSIONAL ENGINEERS PROVINCE OF PRINCE EDWARD ISLAND

PROJECT :

PEI BELFAST CONSOLIDATED SCHOOL BOILER REPLACEMENT

TIE PROJECT : 040-20018

DRAWING TITLE :

SCHEMATICS

SCALE: AS NOTED	DATE: 2020/05/08
APPROVED BY: M.R.	CHECKED BY: J.Z.
DRAWN BY: A.T.	PROJECT #: 201-03997-00

SHEET No.:

M-105

Drawing name: X:\Dartmouth\Building\2020\201-03997-00 PEI Belfast Consolidated School Boiler\10 Drawings\14 Mechanical\14.1 Working\201-03997 Mechanical.dwg

May 21, 2020 – 9:43am

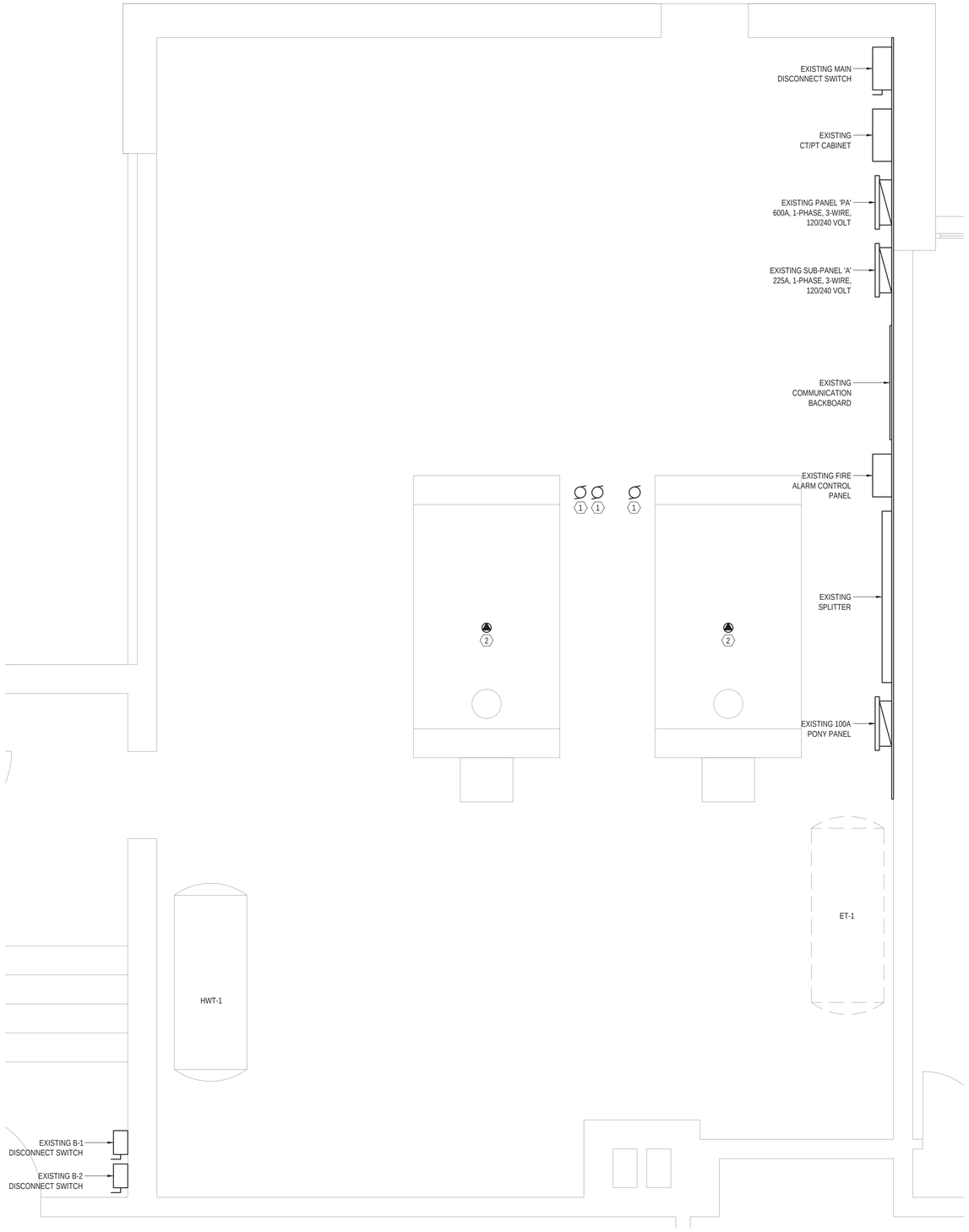

1 E-101 BOILER ROOM - DEMOLITION PLAN
SCALE: 1:25

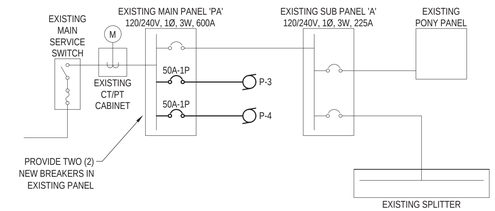

2 E-101 SINGLE LINE DIAGRAM - EXISTING
N.T.S.

NOTE:
ANY ITEM WITHOUT DIRECTION IS EXISTING TO REMAIN, UNLESS NOTED OTHERWISE.

DEMOLITION NOTES:

1. REMOVE ALL ELECTRICAL ASSOCIATED WITH PUMP BACK TO SOURCE OF SUPPLY, INCLUDING ALL WIRING, CONDUIT AND STARTERS / DISCONNECTS. PUMP BEING REMOVED BY MECHANICAL.
2. REMOVE ALL ELECTRICAL ASSOCIATED WITH BOILER BACK TO SOURCE OF SUPPLY, INCLUDING ANY REDUNDANT WIRING, CONDUIT AND STARTERS / DISCONNECTS. EXISTING DISCONNECT SWITCHES TO BE REUSED FOR NEW BOILER. BOILER BEING REMOVED BY MECHANICAL.

WSP Canada Inc.
1 Spectacle Lake Drive
Dartmouth, Nova Scotia, Canada B3B 1X7
T 902-835-9955 F 902-835-1645 www.wsp.com

DESCRIPTION	NO.	DATE
ISSUED FOR TENDER	2	2020.05.21
ISSUED FOR 99% REVIEW	1	2020.05.08

REVISIONS

SEAL

PROFESSIONAL ENGINEER
The Association of Professional Engineers of The Province of Prince Edward Island
Manjusha Naidu
1604
21/05/2020
DATE
PROVINCE OF PRINCE EDWARD ISLAND

PROJECT :
PEI BELFAST CONSOLIDATED SCHOOL BOILER REPLACEMENT

TIE PROJECT : 040-20018

DRAWING TITLE :
BOILER ROOM - DEMOLITION PLAN ELECTRICAL

SCALE:	DATE:
AS NOTED	2020/05/08
APPROVED BY: C.B.	CHECKED BY: C.B.
DRAWN BY: M.K.	PROJECT #: 201-03995-00

SHEET No.:
E-101

Drawing name: \\wsp.net\ca\Projects\Communities\Belfast\201-03995-00 PEI Belfast Consolidated School\Drawings\ELECTRICAL\E-101 Boiler Room Demolition Plan.dwg
May 21, 2020 – 11:29am

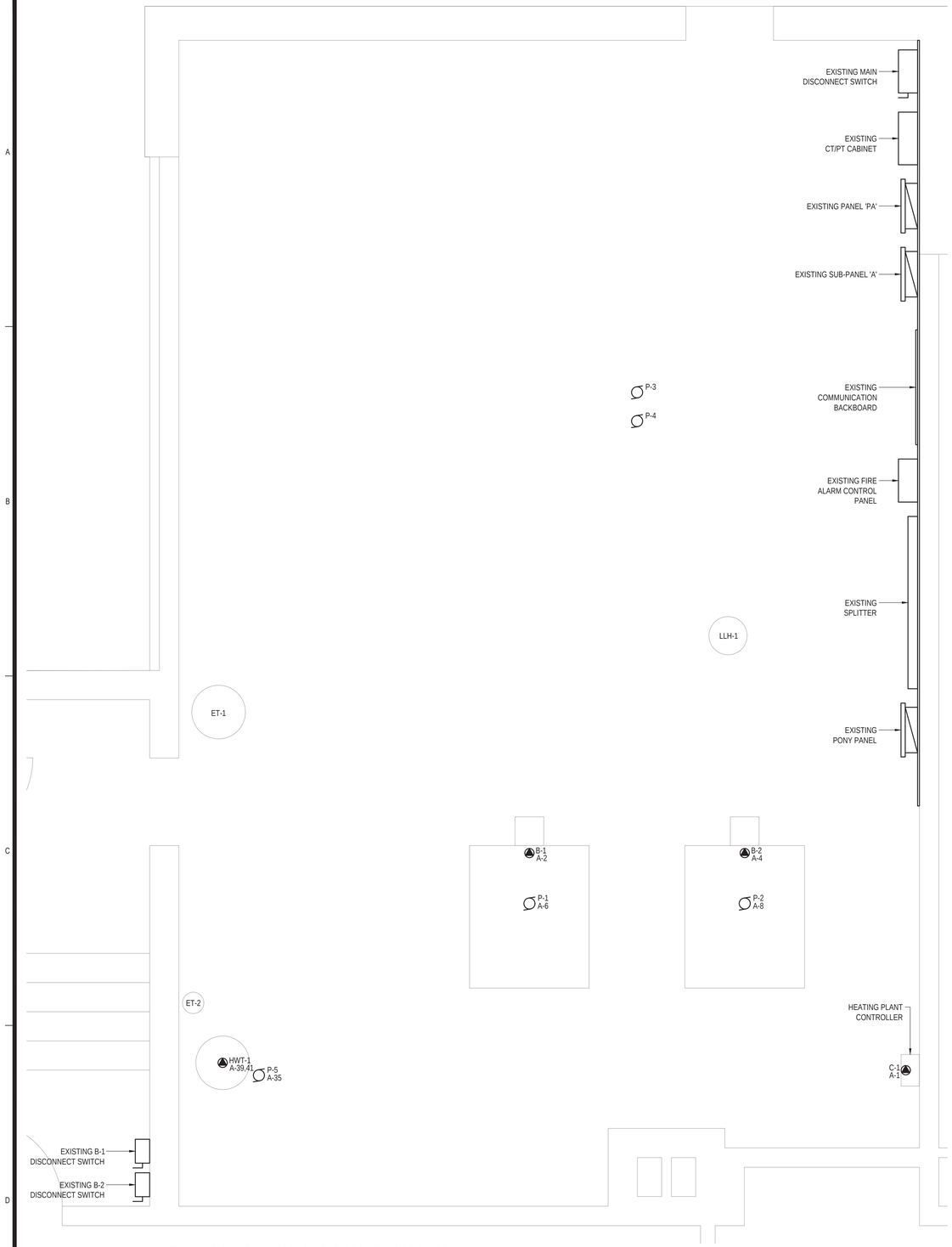

1 / E-102 BOILER ROOM - RENOVATION PLAN

SCALE: 1:25

MECHANICAL EQUIPMENT SCHEDULE

TAG	DESCRIPTION	ELECTRICAL							NOTES
		LOAD (FLA)	VOLTS	PHASE	PANEL	STARTER / CONTROL SUPPLY	DISCONNECT SWITCH SUPPLY	FEEDER	
B-1	BOILER BURNER	7.5	120	1	A	-	REUSE EXISTING	2 #12 AWG CU PLUS BOND	-
B-2	BOILER BURNER	7.5	120	1	A	-	REUSE EXISTING	2 #12 AWG CU PLUS BOND	-
P-1	CIRCULATION PUMP	16.0	120	1	A	BY MECH	30A/UF	2 #12 AWG CU PLUS BOND	-
P-2	CIRCULATION PUMP	16.0	120	1	A	BY MECH	30A/UF	2 #12 AWG CU PLUS BOND	-
P-3	VERTICAL PUMP	34.0	120	1	PA	VFD BY MECH	60A/UF	2 #8 AWG CU PLUS #10 BOND	PROVIDE NOTE ON DISCONNECT SWITCH READING "SHUT DOWN MOTOR AT VFD BEFORE SWITCHING OFF, EXCEPT IN EMERGENCY"
P-4	VERTICAL PUMP	34.0	120	1	PA	VFD BY MECH	60A/UF	2 #8 AWG CU PLUS #10 BOND	PROVIDE NOTE ON DISCONNECT SWITCH READING "SHUT DOWN MOTOR AT VFD BEFORE SWITCHING OFF, EXCEPT IN EMERGENCY"
P-5	CIRCULATION PUMP	7.2	120	1	A	BY MECH	15A/UF	2 #12 AWG CU PLUS BOND	-
HWT-1	WATER HEATER	2 x 12.5	240	1	A	-	30A/UF	3 #12 AWG CU PLUS BOND	-
C-1	BOILER CONTROL	0.1	120	1	A	-	-	2 #12 AWG CU PLUS BOND	-

EXISTING PANEL: 'A'

LOCATION: BOILER ROOM	VOLTAGE: 120/240V	AIC RATING:
SUPPLY FROM: MAIN PANEL 'PA'	PHASES: 1	MAINS TYPE:
ENCLOSURE:	NUMBER OF WIRES: 3	MAINS RATING: 225A
MOUNTING: SURFACE		MCB RATING:

CKT	CIRCUIT DESCRIPTION	TRIP	POLES	A		B		POLES	TRIP	CIRCUIT DESCIPTION	CKT
1	BOILER CONTROL *	15A	1	-	-			1	20A	BOILER 1 ‡	2
3	SPARE	15A	1			-	-	1	20A	BOILER 2 ‡	4
5	BOILER ROOM UNIT HEATER	15A	1	-	-			1	20A	CIRCULATOR PUMP 1 ‡	6
7	BOILER ROOM UNIT HEATER CIRC PUMP	15A	1			-	-	1	20A	CIRCULATOR PUMP 2 ‡	8
9	STAGE STORAGE UNIT HEATER	15A	1	-	-			1	15A	HOT WATER CIRCULATION PUMP	10
11	GYM HEATER CIRC PUMP	15A	1			-	-	2	15A	CLASSROOM FAN #1	12
13	STAGE STORAGE UNIT HEATER	15A	1	-	-						14
15	STAGE STORAGE UNIT HEATER CIRC PUMP	15A	1			-	-	1	15A	CIRCULATION PUMP, CLASSROOMS	16
17	SUMP PUMP	15A	1	-	-			1	15A	CIRCULATION PUMP, ADM END	18
19	CLASSROOM FAN #2	30A	2			-	-	2	30A	WATER PUMP	20
21				-	-						22
23	PRINCIPAL'S OFFICE MASTER CLOCK	15A	1			-	-	1	15A	DOMESTIC HOT WATER PUMP	24
25	FORCE FLOW HEATER, REAR ENTRY	15A	1	-	-			2	15A	FIRE ALARM PANEL	26
27	FORCE FLOW HEATER, BOTTOM FRONT STAIR	15A	1			-	-				28
29	PA SYSTEM PRINCIPAL'S OFFICE	15A	1	-	-			1	15A	ADMINISTRATION FAN	30
31	CENTRAL AIR COMPRESSOR	20A	2			-	-	1	15A	GYMNASIUM FAN	32
33				-	-			1	15A	STARTER COIL	34
35	CIRCULATOR PUMP 5 ‡	15A	1			-	-	1	15A	DAY TANK PUMP	36
37	SPARE ‡	15A	1	-	-			1	15A	BOILER ROOM FAN (ON CLOCK)	38
39	WATER HEATER ‡	20A	2			-	-	2	40A	STOVE	40
41				-	-						42
	TOTAL PHASE LOADS			- W		- W					
	TOTAL LOAD:			- W (- A)							

* = REUSE EXISTING BREAKER
‡ = PROVIDE NEW BREAKER IN EXISTING PANEL
NOTE: ANY BREAKERS ABANDONED BY THE WORK SHALL BE RELABELED AS "SPARE"

WSP Canada Inc.
1 Spectacle Lake Drive
Dartmouth, Nova Scotia, Canada B3B 1X7
T 902-835-9955 F 902-835-1645 www.wsp.com

DESCRIPTION	NO.	DATE
ISSUED FOR TENDER	2	2020.05.21
ISSUED FOR 99% REVIEW	1	2020.05.08

REVISIONS

SEAL

PROFESSIONAL ENGINEER
THE ASSOCIATION OF PROFESSIONAL ENGINEERS OF PRINCE EDWARD ISLAND
Manjusha Naidu
1604
21/05/2020
DATE
PROVINCE OF PRINCE EDWARD ISLAND

PROJECT :
PEI BELFAST CONSOLIDATED SCHOOL BOILER REPLACEMENT

TIE PROJECT : 040-200018

DRAWING TITLE :
BOILER ROOM - RENOVATION PLAN ELECTRICAL

SCALE: AS NOTED	DATE: 2020/05/08
APPROVED BY: C.B.	CHECKED BY: C.B.
DRAWN BY: M.K.	PROJECT #: 201-03995-00

SHEET No.:
E-102

Drawing name: \\ca0081001031\Users\Documents\Revitlocal\2020\201-03995-00 PEI Water Conservation Project Bldg 1\E-Electrical\E-102 Boiler Room - Renovation Plan.rvt Version: 2019 Plotted by: Naidu, Manjusha
May 21, 2020 - 11:29am