PROVINCE OF PRINCE EDWARD ISLAND
DEPARTMENT OF TRANSPORTATION & INFRASTRUCTURE RENEWAL

SITE LOCATION PLAN

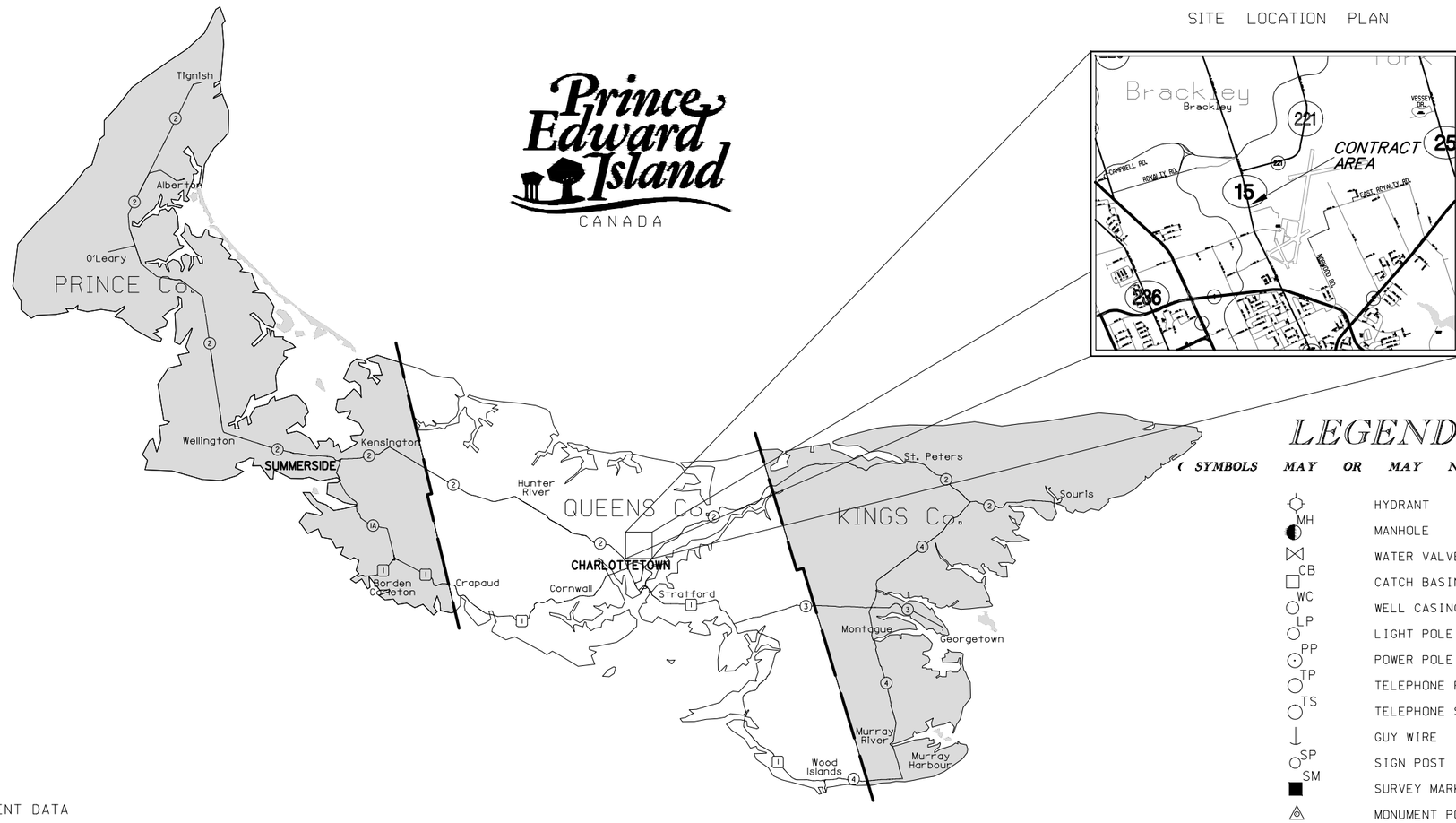

Prince Edward Island
CANADA

LEGEND:

(SYMBOLS MAY OR MAY NOT BE PRESENT)

- HYDRANT
- MH — MANHOLE
- WATER VALVE
- CB — CATCH BASIN
- WC — WELL CASING
- LP — LIGHT POLE
- PP — POWER POLE
- TP — TELEPHONE POLE
- TS — TELEPHONE STANDARD
- GUY WIRE
- SP — SIGN POST
- SM — SURVEY MARKER
- MONUMENT POINT
- GUARD RAIL
- FENCE LINE

DRAWINGS LIST

SHEET 01 PLAN/PROFILE, ROUTE 15
SHEET 02 TYPICAL SECTION AND DETAIL
SHEET 03 HORIZONTAL AND VERTICAL ALIGNMENT DATA

ISSUED FOR TENDER
JULY 2015

CONTRACT DRAWINGS FOR ROUTE 15 - BRACKLEY

P.M.S. No. 01501

PROJECT 2015040

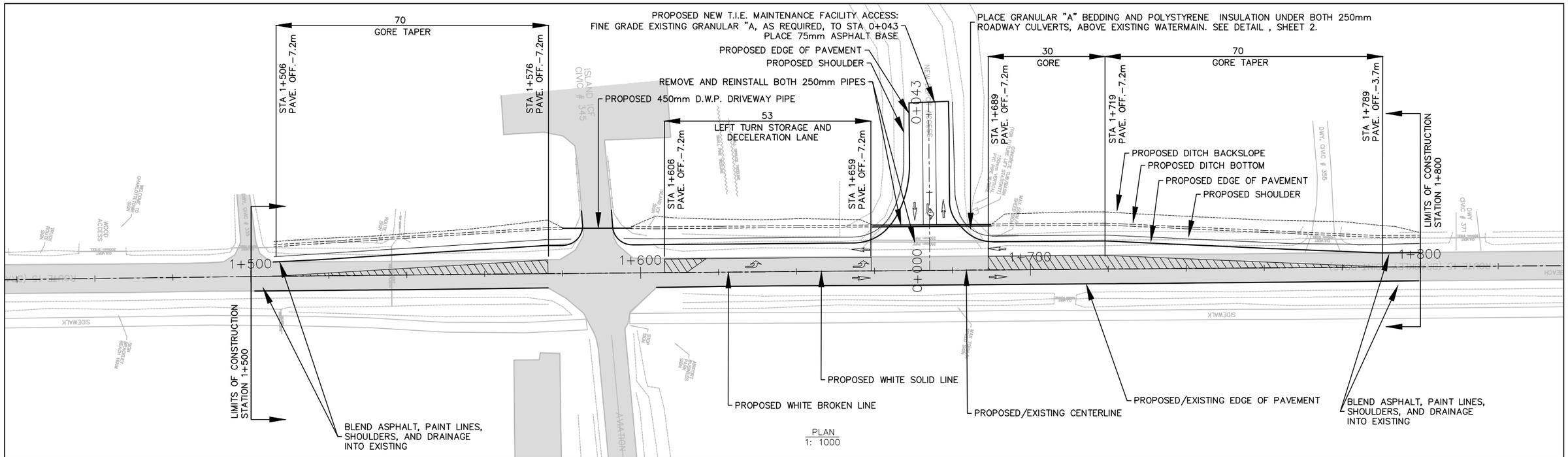

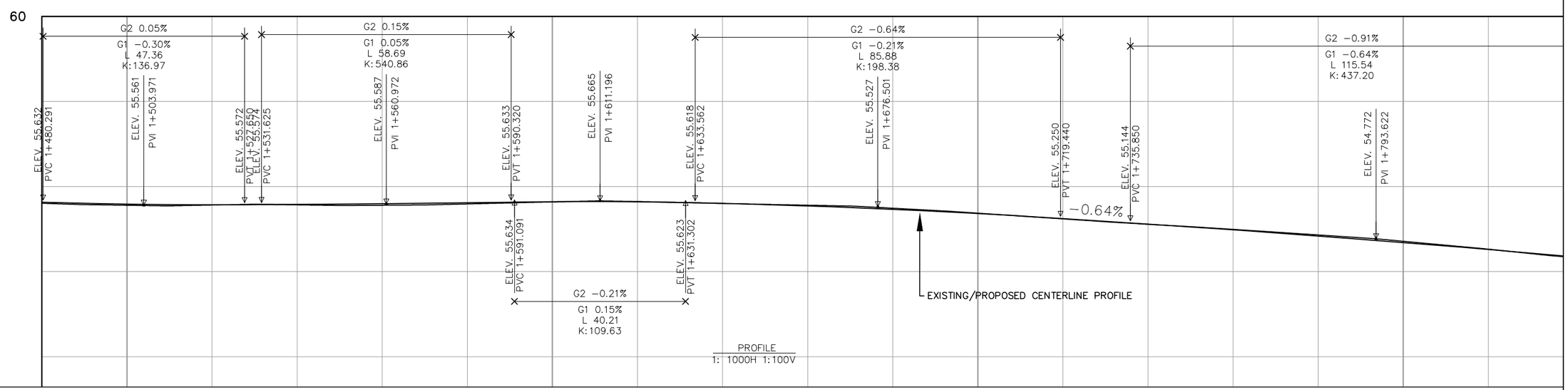

	1+500					1+600					1+700					1+800	
Existing	55.560	55.566	55.570	55.561	55.591	55.639	55.648	55.604	55.561	55.491	55.375	55.240	55.114	54.994	54.863	54.713	54.529
Proposed	55.587	55.571	55.578	55.594	55.618	55.644	55.641	55.603	55.544	55.465	55.366	55.246	55.117	54.982	54.837	54.684	54.521
Cut Depth							0.007	0.001	0.017	0.026	0.009			0.012	0.025	0.030	0.008
Fill Height	0.027	0.005	0.009	0.034	0.027	0.006						0.006	0.004				

Prince Edward Island CANADA
DEPT OF TRANSPORTATION, INFRASTRUCTURE, AND ENERGY
Tel 902 368 5100
Fax 902 368 5395
http://www.gov.pe.ca/
PO Box 2000
Charlottetown
Prince Edward Island
Canada C1A 7N8

NOTES: ALL WORK SHALL BE CONDUCTED IN ACCORDANCE WITH T.I.E.'s STANDARD SPECIFICATIONS AND ENVIRONMENTAL PROTECTION PLAN (EPP)
MAINTAIN ENVIRONMENTAL CONTROLS UNTIL VEGETATION HAS ESTABLISHED OR AS INSTRUCTED ON SITE
ALL DRIVEWAY CULVERTS AND SIDE SLOPES SHALL BE MIN. 3H:1V

SURVEY BY:	T.I.E.	SCALE:	AS NOTED
DRAWN BY:	R.CRANE	DATE:	JULY 2015
APPROVED BY:	R.CRANE	DATE:	JULY 2015
PROJECT No.:	2015040	FILE No.:	

No.	REVISIONS	DATE
1	ISSUED FOR TENDER	JULY 2015

COUNTY: QUEENS
CONTROL SECTION: 01501
STATIONING: STATION 1+500 - 1+800

ROUTE 15 - BRACKLEY
PLAN AND PROFILE

SHEET No. 1 OF 3

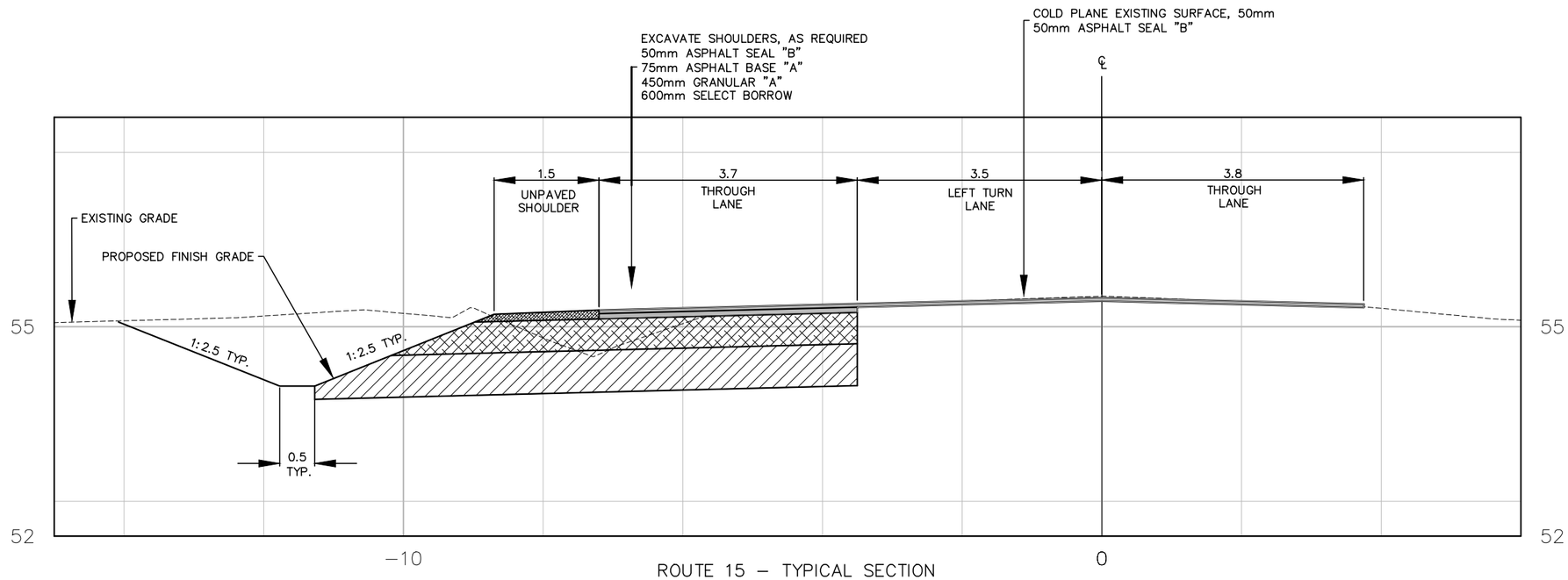

ROUTE 15 – TYPICAL SECTION
SCALE: 1:75

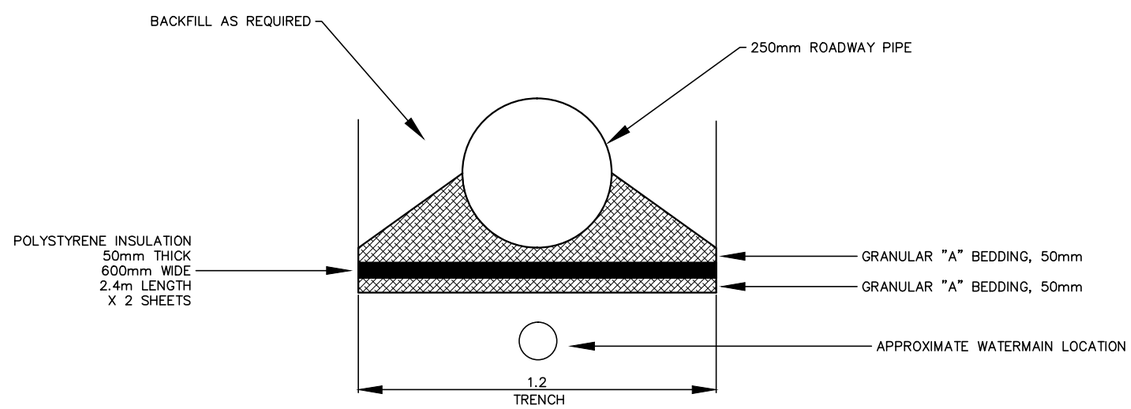

DETAIL: PIPE INSULATION
SCALE: N.T.S.

Prince Edward Island CANADA

DEPT OF TRANSPORTATION, INFRASTRUCTURE, AND ENERGY
Tel 902 368 5100
Fax 902 368 5395
http://www.gov.pe.ca/
PO Box 2000
Charlottetown
Prince Edward Island
Canada C1A 7N8

NOTES: ALL WORK SHALL BE CONDUCTED IN ACCORDANCE WITH T.I.E.'s STANDARD SPECIFICATIONS AND ENVIRONMENTAL PROTECTION PLAN (EPP)
MAINTAIN ENVIRONMENTAL CONTROLS UNTIL VEGETATION HAS ESTABLISHED OR AS INSTRUCTED ON SITE
ALL DRIVEWAY CULVERTS AND SIDE SLOPES SHALL BE MIN. 3H:1V

SURVEY BY:	T.I.E.	SCALE:	AS NOTED
DRAWN BY:	R.CRANE	DATE:	JULY 2015
APPROVED BY:	R.CRANE	DATE:	JULY 2015
PROJECT No.:	2015040	FILE No.:	

No.	REVISIONS	DATE
1	ISSUED FOR TENDER	JULY 2015

COUNTY: QUEENS
CONTROL SECTION: 01501
STATIONING:

ROUTE 15 - BRACKLEY
TYPICAL SECTION AND DETAIL

SHEET No. 2 OF 3

Alignment Report: RT 15

	STATION	CURVE/SPIRAL/TANGET DATA	NORTHING	EASTING
L6	1+387.800 1+394.978	LENGTH: 7.178	692865.819 692872.824	389379.528 389377.964
		TANGENT DIRECTION: 347°24'45"		
C5 (Right)	1+420.953	LENGTH: 51.950 RADIUS: 8000.000 DELTA: 0°22'19" DEGREE OF CURVATURE (ARC): 0°12'53" CHORD: 51.950 MID-ORDINATE: 0.042	692898.175	389372.303
		TANGENT DIRECTION: 347°24'45"		
L7	1+446.928 1+490.931	LENGTH: 44.003	692923.562 692966.569	389366.807 389357.497
		TANGENT DIRECTION: 347°47'05"		
C3 (Right)	1+523.816	LENGTH: 65.770 RADIUS: 13893.061 DELTA: 0°16'16" DEGREE OF CURVATURE (ARC): 0°07'25" CHORD: 65.770 MID-ORDINATE: 0.039	692998.709	389350.539
		TANGENT DIRECTION: 347°47'05"		
L4	1+556.701 1+697.025	LENGTH: 140.324	693030.882 693168.169	389343.733 389314.692
		TANGENT DIRECTION: 348°03'21"		
C4 (Right)	1+711.758	LENGTH: 29.466 RADIUS: 30000.000 DELTA: 0°03'23" DEGREE OF CURVATURE (ARC): 0°03'26" CHORD: 29.466 MID-ORDINATE: 0.004	693182.583	389311.643
		TANGENT DIRECTION: 348°03'21"		
L5	1+726.491 1+854.434	LENGTH: 127.943	693197.000 693322.199	389308.608 389282.252
		TANGENT DIRECTION: 348°06'44"		

Alignment Report: ACCESS

	STATION	CURVE/SPIRAL/TANGET DATA	NORTHING	EASTING
L8	0+000.000 0+043.156	LENGTH: 43.156	693145.827 693136.964	389319.418 389277.182
		TANGENT DIRECTION: 258°08'55"		

Vertical Alignment Report: RT 15

No.	Type	Profile Curve Type	Length	Grade	K Value	Start Station	Start Elevation	End Station	End Elevation	Grade In	Grade Out	Grade Change	PVI Station	PVI Elevation
1	Tangent		1.910m	-0.98%		1+387.80m	56.169m	1+389.71m	56.150m					
2	Symmetric Parabola	Sag	72.564m		106.508	1+389.71m	56.150m	1+462.27m	55.686m	-0.98%	-0.30%	0.68%	1+425.99m	55.794m
3	Tangent		18.017m	-0.30%		1+462.27m	55.686m	1+480.29m	55.632m					
4	Symmetric Parabola	Sag	47.359m		136.967	1+480.29m	55.632m	1+527.65m	55.572m	-0.30%	0.05%	0.35%	1+503.97m	55.561m
5	Tangent		3.975m	0.05%		1+527.65m	55.572m	1+531.63m	55.574m					
6	Symmetric Parabola	Sag	58.694m		540.86	1+531.63m	55.574m	1+590.32m	55.633m	0.05%	0.15%	0.11%	1+560.97m	55.587m
7	Tangent		0.771m	0.15%		1+590.32m	55.633m	1+591.09m	55.634m					
8	Symmetric Parabola	Crest	40.211m		109.628	1+591.09m	55.634m	1+631.30m	55.623m	0.15%	-0.21%	-0.37%	1+611.20m	55.665m
9	Tangent		2.260m	-0.21%		1+631.30m	55.623m	1+633.56m	55.618m					
10	Symmetric Parabola	Crest	85.878m		198.383	1+633.56m	55.618m	1+719.44m	55.250m	-0.21%	-0.64%	-0.43%	1+676.50m	55.527m
11	Tangent		16.410m	-0.64%		1+719.44m	55.250m	1+735.85m	55.144m					
12	Symmetric Parabola	Crest	115.544m		437.204	1+735.85m	55.144m	1+851.39m	54.247m	-0.64%	-0.91%	-0.26%	1+793.62m	54.772m
13	Tangent		3.041m	-0.91%		1+851.39m	54.247m	1+854.43m	54.219m					

Alignment Report: ACCESS LT EP

TAG No	STATION	CURVE/SPIRAL/TANGET DATA	NORTHING	EASTING
L4	0+000.000 0+002.739	LENGTH: 2.739	693122.669 693125.349	389316.957 389316.390
		TANGENT DIRECTION: 348°03'21"		
C3 (Left)	0+007.003	LENGTH: 8.194 RADIUS: 12.000 DELTA: 39°07'24" DEGREE OF CURVATURE (ARC): 143°14'22" CHORD: 8.036 MID-ORDINATE: 0.693	693129.520	389315.508
		TANGENT DIRECTION: 348°03'21"		
L5	0+010.933 0+010.968	LENGTH: 0.035	693132.200 693132.222	389312.191 389312.164
		TANGENT DIRECTION: 308°55'57"		
C4 (Left)	0+014.782	LENGTH: 7.459 RADIUS: 14.500 DELTA: 29°28'27" DEGREE OF CURVATURE (ARC): 118°32'35" CHORD: 7.377 MID-ORDINATE: 0.477	693134.618	389309.197
		TANGENT DIRECTION: 308°55'57"		
L6	0+018.427 0+020.145	LENGTH: 1.718	693135.245 693135.527	389305.435 389303.741
		TANGENT DIRECTION: 279°27'31"		
C5 (Left)	0+025.260	LENGTH: 10.111 RADIUS: 27.000 DELTA: 21°27'23" DEGREE OF CURVATURE (ARC): 63°39'43" CHORD: 10.052 MID-ORDINATE: 0.472	693136.368	389298.695
		TANGENT DIRECTION: 279°27'31"		
L7	0+030.256 0+045.886	LENGTH: 15.630	693135.305 693132.055	389293.691 389278.402
		TANGENT DIRECTION: 258°00'08"		

Alignment Report: ACCESS RT EP

TAG No	STATION	CURVE/SPIRAL/TANGET DATA	NORTHING	EASTING
L8	0+000.000 0+001.631	LENGTH: 1.631	693162.049 693160.450	389308.618 389308.944
		TANGENT DIRECTION: 168°28'41"		
C6 (Right)	0+006.298	LENGTH: 8.826 RADIUS: 11.000 DELTA: 45°58'28" DEGREE OF CURVATURE (ARC): 156°15'40" CHORD: 8.592 MID-ORDINATE: 0.873	693155.878	389309.876
		TANGENT DIRECTION: 168°28'41"		
L9	0+010.458 0+011.789	LENGTH: 1.332	693152.030 693150.932	389307.237 389306.483
		TANGENT DIRECTION: 214°27'09"		
C7 (Right)	0+015.377	LENGTH: 6.827 RADIUS: 9.000 DELTA: 43°27'41" DEGREE OF CURVATURE (ARC): 190°59'09" CHORD: 6.664 MID-ORDINATE: 0.640	693147.974	389304.454
		TANGENT DIRECTION: 214°27'09"		
L10	0+018.616 0+044.168	LENGTH: 25.551	693147.223 693141.873	389300.946 389275.962
		TANGENT DIRECTION: 257°54'50"		

Prince Edward Island CANADA

DEPT OF TRANSPORTATION, INFRASTRUCTURE, AND ENERGY
Tel 902 368 5100
Fax 902 368 5395
http://www.gov.pe.ca/
PO Box 2000
Charlottetown
Prince Edward Island
Canada C1A 7N8

NOTES: ALL WORK SHALL BE CONDUCTED IN ACCORDANCE WITH T.I.E.'S STANDARD SPECIFICATIONS AND ENVIRONMENTAL PROTECTION PLAN (EPP)
MAINTAIN ENVIRONMENTAL CONTROLS UNTIL VEGETATION HAS ESTABLISHED OR AS INSTRUCTED ON SITE
ALL DRIVEWAY CULVERTS AND SIDE SLOPES SHALL BE MIN. 3H:1V

SURVEY BY:	T.I.E.	SCALE:	AS NOTED
DRAWN BY:	R.CRANE	DATE:	JULY 2015
APPROVED BY:	R.CRANE	DATE:	JULY 2015
PROJECT No.:	2015040	FILE No.:	

No.	REVISIONS	DATE
1	ISSUED FOR TENDER	JULY 2015

COUNTY: QUEENS
CONTROL SECTION: 01501
STATIONING:

ROUTE 15 - BRACKLEY
HORIZONTAL AND VERTICAL
ALIGNMENT DATA

SHEET No. 3 OF 3