Maritime Electric Company, Limited

Borden Substation and Cape Tormentine Riser Station Construction

Request for Tender 2016-18

TABLE OF CONTENTS

1. PROJECT SCOPE DESCRIPTION 1
1.1 General 1

2. INSTRUCTIONS TO BIDDERS 1
2.1 Invitations 1
2.2 Tender Document 1
2.3 Tender Requirements 2
2.4 Submission of Bid Form 3
2.5 Enquiries 3
2.6 Addenda 3
2.7 Previous Experience 3
2.8 Tender without Knowledge of Others 4
2.9 Withdrawal of Tender 4
2.10 Shipment 4
2.11 Site Conditions and Investigations 4
2.12 Equipment Schedule 4
2.13 Summary Schedule 5
2.14 Job Supervisory Personnel 5
2.15 Tenderer's Previous Experience 5
2.16 Signing Bids 5
2.17 Evaluation of Tenders 5
2.18 Safety Policy 5

3. CONDITIONS OF CONTRACT 6
3.1 Contract Documents 6
3.2 Work to be to the Satisfaction of the Engineer 6
3.3 Execution of Work 6
3.4 Program of Work and Extension of Time 6
3.5 Materials and Material Subsititution 7
3.6 Materials to be Supplied by Maritime Electric 8
3.7 Sub-Contracts 8
3.8 Supplied by Contractor 8
3.9 Terms of Payment 9
3.10 Work to be Free from all Encumbrances 9
3.11 Provisions for Cancellation of Contract 9
3.12 Default of the Contractor 10
3.13 Inspection and Tests 11
3.14 Permits and Licences 11
3.15 Patents 11

4. SUPPLEMENTARY CONDITIONS 11
4.1 Tender Price 11
4.2 Fixed Price Breakdown 12

4.3 Governing Laws 12
4.4 Tender Validity Period 12
4.5 Foreign Workers 12
4.6 Dispute Resolution 12
4.7 Guarantee 13
4.8 Additional Information Requested with Tender 13
4.9 Indemnification 14
4.10 Insurance 14
4.11 Workers Compensation Board of Prince Edward Island and New Brunswick 15
4.12 Health and Safety 15
4.13 Environmental 15

5. SPECIFICATION 17

1. PROJECT SCOPE DESCRIPTION

1.1 General

Maritime Electric is building a new 138 kV Substation in Borden, PE and a Riser Station in Cape Tormentine, NB, to support two (2) new 138 kV subsea cables that will be installed between New Brunswick and Prince Edward Island.

We are seeking a Contractor to supply all supervision, labour, plant, transportation, materials and equipment and do all work necessary for the completion of the Borden Substation and Cape Tormentine Riser Station in accordance with all specifications and drawings.

Work will be performed under the direction and to the satisfaction of the Contract Engineer. The Contractor shall reference Appendices 1 to 4 in the execution of the Work.

2. INSTRUCTION TO BIDDERS

2.1 Invitations

Maritime Electric Company, Limited, hereinafter called the Owner requests Tenders (Proposals) as specified in the document for supervision, labour, plant, transportation, materials and equipment and all work necessary for the completion of the Borden Substation and Cape Tormentine Riser Station.

Tenders to be received by:

Barb McGuire
Supervisor, Purchasing
Maritime Electric Company, Limited
PO Box 1328, 180 Kent Street
Charlottetown PE C1A 7N2 Canada

By 3:00 PM, Atlantic Daylight Saving Time, Friday, May 20, 2016.

E-Mailed Tender transmissions are acceptable - barb.mcguire@maritimeelectric.com.

2.2 Tender Document

The Tender document will comprise the following:

- Project Scope Description
- Instructions to Bidders
- Conditions of Contract
- Supplementary Conditions

- Technical
- Appendix I – Drawing List
- Appendix II – Fencing Standard Details
- Appendix III – Tender Submission Form
- Appendix IV – Geotechnical Report
- Appendix V – Intent to Bid Form

2.3 Tender Requirements

a. In Accordance with Tender Document

Tenders shall meet the Tender document's requirements concerning:

i. Submission of Tenders as described in these Instructions to Tenderers;
ii. Performance of Works to the quality, in the manner specified, and within times specified in the Specifications; and
iii. Performance of all other obligations and assumption of all liability imposed upon the Tenderer by the said Tender document.

This RFT does not contain an exhaustive list of the work to be performed. Tenderers are, as a minimum, to submit Tenders that include the noted work.

b. Right to Reject

Tenderers are notified that the lowest or any Tender may not be accepted by Maritime Electric. Maritime Electric reserves the right to reject any and all Tenders at any time without further explanation or to accept any Tender considered advantageous to Maritime Electric.

c. Negotiation with Tenderers

Maritime Electric reserves the right in its sole discretion to clarify any Tender after closing by seeking further information from a Tenderer without becoming obligated to clarity or seek further information from any or all other Tenderers. However, this will not be an opportunity by the Tenderer to either correct errors or to change their Tender in any substantive manner.

d. Alternatives Not Specified

Alternatives offered by a Tenderer and not specified in Tender document may not be considered unless submitted separately and in addition to a Tender in accordance with the Tender document, and unless such alternatives affect only the quality of the Works as specified in the Specification and do not affect other requirements of the Tender document. Alternatives shall be accompanied by complete information on physical characteristics, qualities, performance and price.

2.4 Submission of Bid Form

Tenders may be submitted by email to barb.mcguire@maritimeelectric.com by the date specified in Invitations (3:00 PM Atlantic Daylight Saving Time, Friday, May 20, 2016).

2.5 Enquiries

2.5.1 Enquiries shall be submitted only by prospective Tenderers and not by prospective Sub-contractors or others.

All enquiries shall be by letter or e-mail only and addressed as follows:

Maritime Electric Company, Limited
PO Box 1328, 180 Kent Street
Charlottetown PE C1A 7N2 CANADA
Attention: Barb McGuire - Supervisor, Purchasing
Telephone: (902) 629-3609
E-mail: barb.mcguire@maritimeelectric.com

2.5.2 Interpretation
No oral interpretation shall be made to the Tender Document, or be effective to modify any of the provisions of the Tender Document. Every request for an interpretation shall be made in writing, addressed and forwarded as described - Enquiries.

2.5.3 Omissions and Discrepancies
Should the Tenderer find discrepancies in, or omissions from, the drawings or other Tender Documents, or should it be in doubt as to their meaning, the Tenderer should at once make an enquiry in accordance with section - Enquiries.

2.6 Addenda

Any interpretation of, or change in the Tender document prior to the latest date specified herein for receipt of bids, will be made only by written addendum issued by Maritime Electric to each Tenderer to whom the bid document has been issued and shall become part of the Tender document. No other interpretation or explanation shall be valid.

Tenders shall contain and encompass all addenda issued.

2.7 Previous Experience

Tenderers shall have experience in all aspects of the Works on which they are tendering.

2.8 Tenders without Knowledge of Others

Tenders shall be submitted without any connection, comparison of figures or arrangement with or knowledge of any other person or persons submitting a Tender for the same work and shall be in all respects, fair and without collusion or fraud.

2.9 Withdrawal of Tender

Any Tender may be withdrawn by the Tenderer at any time prior to acceptance.

2.10 Shipment

Shipment of the Works shall be Incoterm DDP (F.O.B. Destination), Borden Substation, PE, and Cape Tormentine, NB.

Work locations shall include the Borden Substation, Borden-Carlton, PEI and Cape Tormentine, New Brunswick.

2.11 Site Conditions and Investigations

2.11.1 The Tenderer shall have a personal knowledge of the location of the proposed Work and shall be deemed to have made a careful examination of the Site of the Work so as to satisfy itself as to the working conditions, the nature and extent of the Work to be done, the special risks, if any, associated therewith, the obstacles or difficulties likely to be encountered, and any other matters and items which are necessary or desirable to gain a proper understanding of the Work and the conditions under which it shall be performed.

2.11.2 If the Tenderer requires additional information or explanation concerning any apparent or possible conflict, discrepancy or omission in the Tender Document or any other data furnished by or obtained from Maritime Electric relating to the Work, the Tenderer shall apply for the same as described the section - Enquiries.

2.11.3 The Tenderer shall be solely responsible for any errors, omissions or misunderstandings resulting from the Tenderer's failure to make a thorough examination of the Site. The Tenderer shall obtain all required information and shall not claim at any time after the submission of the Tender or the subsequent execution of a Contract that there was any misunderstanding with regard to the conditions imposed by the Contract.

The Tenderer can request a site meeting to review the conditions of the existing site.

2.12 Equipment Schedule

The Tenderer shall submit with its Tender, a comprehensive equipment schedule listing details of all construction equipment which the Tenderer proposes to use to properly execute the Work.

2.13 Summary Schedule

The Tenderer shall submit a copy of the Summary Schedule with their Tender.

2.14 Job Supervisory Personnel

The Tenderer shall submit with its Tender resumes of experience of its proposed job management and supervisory personnel.

2.15 Tenderer's Previous Experience

The Tenderer shall submit with the Tender, a list of projects contracted by the Tenderer and similar in scope to the Work of this Tender Document.

The listing shall include the project name, location, contract date or date of commencement of work and a note as to whether the contract is complete or in progress.

2.16 Signing Bids

If the Tender is submitted by a corporation, the Tender shall be signed under seal in its name and on its behalf by two duly authorized offices of the corporation.

If the Tender is submitted by an individual, it should be signed under seal.

If the Tender is submitted by two or more Contractors as partners in a Joint Venture, each partner by signing under seal shall undertake that if the Tender is accepted they will be jointly and severally bound to discharge the duties, obligations and responsibilities of the Contract.

2.17 Evaluation of Tenders

In evaluating the Tenders, while price will be the main criterion, Maritime Electric and Stantec may consider items such as the following:

a. Schedule
b. Past Experience of Similar Work by the Contractor and Proposed Subcontractors.
c. Quality, including quality of work from previous contracts.
d. Safety, including safety issues from previous contracts.

2.18 Safety Policy

Tenderers shall submit with its Tender, it's Safety Policy.

3. CONDITIONS OF CONTRACT

3.1 Contract Documents

The Contract documents are complementary and what is called for by any one shall be as binding as if called for by all. The intention of the documents is to include all labour, supervision, materials, construction plant and equipment, supplies, service, tools, transportation, facilities, and all things necessary for the proper execution of the Works excepting only those items specifically stated as being furnished by Maritime Electric.

3.2 Work to be to the Satisfaction of the Engineer

The Contractor shall execute the Works in accordance with the Contract and to the satisfaction of the Engineer and shall comply with the Engineer's instructions on any matter relating thereto.

3.3 Execution of Works

The whole of the Works shall be of a kind and conducted in a manner approved by the Engineer who shall also decide on questions arising under the Contract whether concerning the execution of the Works or the interpretation of the Specification.

3.4 Program of Work and Extension of Time

a. Time is of the essence of the Contract

The Contractor (Vendor) shall proceed with the Works when authorized to do so by the Engineer and shall complete the whole of the Works on or before the completion date proposed in the Schedule of Timing approved by Maritime Electric or the Engineer. If the Engineer should be of the opinion and so state in writing to the Contractor that the rate of progress of the Works is insufficient to enable the whole of the Works and any part thereof to be complete within the times proposed for such completion in the Specification, the Contractor shall take whatever measures as the Engineer may specify to expedite the progress of the Work.

The Contractor shall work a sufficient number of hours per shift and shifts per day to complete the Works within the time specified.

b. Extension of Time for Completion

Should the Contractor be delayed in the execution of the Works by such special circumstances as changes in, or addition to, the Work required to be executed hereunder, or by fire, strikes, riots, acts of nature, or by any other happening or occurrence beyond the control of the Contractor (excepting lack of finances or failure to have adequate and suitable equipment, materials or labour forces on the Works), but in no way caused by, or resulting from, an act of default of the Contractor, and which is not otherwise excluded

by the Contract, then the time fixed for completion of the Works may be varied for a period as determined and fixed by the Engineer.

3.5 Materials and Material Substitution

Unless otherwise specified, all materials and equipment to be supplied by the Contractor for incorporation in the permanent Works shall be new and of the best quality of their respective kinds, shall comply with the latest edition of the relevant Standards and shall be subject to the approval of the Engineer before being used, and the delivery, storage and handling thereof shall be the sole responsibility of the Contractor and shall be subject to the approval of the Engineer.

In order to specify the quality and type of materials and equipment required for the Work, trade names and manufacturer's names may have been used in the Specification. The Contractor shall not substitute any other materials and equipment for any materials or equipment specified without the approval of the Engineer.

If the Contractor wishes to make a substitution for materials or equipment specified, they shall submit a request to the Engineer accompanied by complete information on the physical characteristics, qualities and performance of such materials or equipment to be substituted. If requested by the Engineer, the Contractor at their own expense shall submit to the Engineer for comparison purposes samples of both the specified materials or equipment and the proposed substitutes. The decision of the Engineer as to the quality or approval of any materials or equipment which the Contractor proposes to substitute will be final.

The Contractor shall bear the total cost of all necessary modifications to the Works arising as a result of substituted materials or equipment.

No payment over and above the prices entered in the Bid Submittal Form will be made to the Contractor because of the use of substituted materials or equipment.

Requests may be made by potential Tenderers/Contractor for alternatives to specified products, equipment, materials, and/or methods if at least one of the following applies:

- There is a definite and significant cost saving for Maritime Electric.
- A real delivery problem exists that adversely affects the Detailed Working Schedule.
- The Engineer shall decide the validity of the request and if the alternative shall be used.
- Submission for alternatives, after Award of Contract, shall comply with the Tender Document.

For requests for alternatives during the tendering period, only those submissions for alternatives received before (7) days prior to the date of Tender Closing shall be given consideration.

All potential Tenderers shall be advised by Addendum of the specifications for accepted valid alternatives.

3.6 Materials to be Supplied by Maritime Electric

No materials will be supplied by the maritime Electric for inclusion in the Works.

3.7 Sub-Contracts

The Contractor shall not sublet the whole of the Works. The Contractor shall not sublet any part of the Works after award without the written consent of the Engineer.

The Contractor shall be responsible to Maritime Electric for all the work of their Sub-Contractors. The Contractor shall be held as fully responsible to Maritime Electric for the acts and omissions of their Sub-Contractors, if any, and of persons directly or indirectly employed by them or any of them for the acts and omissions of persons directly employed by the Contractor.

Nothing contained in the Contract documents shall create any contractual relation between any Sub-Contractor and Maritime Electric but the Contractor agrees to bind every Sub-Contractor by the terms of the Conditions of Contract and Specification as far as applicable to their work.

Tenderers shall provide the following information in the Tender Submission:

a. A list of all activities, and the scope of each activity, associated with the Work which the Tenderer proposes to subcontract and the proposed subcontractor for each activity.

b. A list of all materials and equipment which the Tenderer proposes to purchase for the Work and the proposed supplier for each item.

3.8 Supplied by Contractor

Except for those materials, services and facilities which are specifically stated in the Specification as being supplied by Maritime Electric, the Contractor shall provide and include in the rates entered in the Tender Submittal Form for the execution of the whole of the Works.

3.9 Terms of Payment

Tenderers are to propose terms of payment based on clearly defined milestones. These proposed milestones will be subject to review, possible negotiation and acceptance by Maritime Electric.

3.10 Work to be Free from all Encumbrances

Before making payment, Maritime Electric or the Engineer may require the Contractor to furnish evidence that all work performed for which payment is being made are free and clear from all lawful claims, liens or privileges, under any law or ordinance including without limiting the generality of the foregoing, legal provisions relating to privileges or liens in favour of workmen, builders, architects or suppliers of materials.

When requested by the Engineer, such evidence shall include:

a. A statutory Declaration that the Works are free from all lawful claims, liens and privileges.

b. Such other evidence as may be necessary to satisfy the Engineer that the Contractor has fulfilled his/her obligations under the Contract.

The Contractor shall indemnify and hold harmless the Owner from and against any and all kinds of claims, liens, privileges including all claims, liens and privileges for labour and services performed and materials furnished in relation to the Works of this Contract.

3.11 Provisions for Cancellation of Contract

Maritime Electric shall have the right to terminate this Contract on one week's notice in which event the Contractor shall be paid by Maritime Electric for all work executed prior to the date of termination at the unit prices, lump sums and provisional sums set out in the Schedule of Prices and in addition:

a. The amounts payable in respect of any preliminary items so far as the work or service comprised therein had been carried out or performed, and a proper proportion (as certified by the Engineer) of any such items, the work or service comprised in which has been partially carried out or performed, insofar as such expenditures shall not have been covered by the aforementioned payments;

b. The cost of materials or goods reasonably ordered for the Works or temporary work which have been delivered to the Contractor or of which the Contractor is legally liable to accept delivery (such materials or goods becoming the property of Maritime Electric upon such payment being made); and

c. A sum to be certified by the Engineer being the amount of any expenditure reasonably incurred by the Contractor in the expectation of completing the whole of the Works insofar as such expenditure shall not have been covered by the aforementioned payments.

Providing always that, against any payments due from Maritime Electric hereunder, Maritime Electric shall be entitled to be credited with any sum previously paid by Maritime Electric to the Contractor in respect of the execution of the Works and Maritime Electric shall not pay or be liable to pay any bonus, damage or other claim by the Contractor or loss of his/her expected profit on the uncompleted portions of the Works.

3.12 Default of the Contractor

If the Contractor assigns the Contract or sublets the whole of the Works or if the Contractor should be adjudged bankrupt or if they should make a general assignment for their benefit of their creditors, or if a receiver should be appointed, or if the Contractor should be wound up or go into liquidation on account of insolvency, or if they refuse or fail to supply the properly skilled workmen, materials, construction equipment and small tools deemed necessary by the Engineer after having received 14 days notice in writing from the Engineer to do so, or if they should fail to make prompt payments to Sub-Contractors or for materials or labour or persistently disregards laws, ordinances, or the instructions of the Engineer, or in the opinion of the Engineer, otherwise be guilty of a substantial violation of the provisions of this Contract then the Owner may, upon the certificate of the Engineer that sufficient cause exists to justify such action and without prejudice to any other right or remedy, give the Contractor written notice and terminate the employment of the Contractor and take possessions of the whole of the Works and finish the Works by whatever method the Owner may deem expedient but without undue delay or expense.

If the employment of the Contractor is terminated in accordance with the provisions of this clause, the Contractor shall not be entitled to receive any further payment until the Works are completed.

Upon completion of the Works, the Engineer shall determine:

a. The amount which would have been due to the Contractor under the Contract if all of the Works had been performed by them; and

b. The costs and expense borne by Maritime Electric in completing the Works, or any part thereof, and damages for delay in completion, if any.

The Contractor shall be entitled to receive the said amount less such cost and expense or if such cost and expense exceeds such amount, the Contractor shall pay upon demand to the Owner the amount of such excess.

3.13 Inspection and Tests

The Engineer or Maritime Electric's duly authorized representative shall at all times have access to the Works wherever it is in preparation or progress and the Contractor shall provide proper facilities for such access and for inspection and testing. If the Specification, the Engineer's instructions, laws or ordinances, or any public authority require any work to be tested or approved, the Contractor shall give the Engineer adequate notice of its readiness for inspection. If any work should be covered up without consent or approval of the Engineer, it must on request be uncovered for examination and made good by the Contractor at their expense.

Tests shall be carried out on the Works to the satisfaction of the Engineer.

Within twenty-four (24) hours after receiving written notice from the Engineer to that effect, the Contractor shall at their expense proceed to remove from the Works any part of the Works which in the opinion of the Engineer fails to meet the requirements of the Contract and to re-execute portions of the Works affected by such removal.

3.14 Permits and Licenses

The Contractor shall secure and pay for all other licenses and permits which they may require to comply fully with all laws, ordinances and regulations of the proper public authorities in connection with the performance of the Works. The Contractor shall be responsible for all damages and shall indemnify and save the Owner harmless from and against all claims for damages and liability which may arise out of failure of the Contractor to secure and pay for any such licenses and permits or to comply fully with any and all applicable laws, ordinances and regulations.

3.15 Patents

The Contractor agrees to indemnify, save harmless and defend the Owner from and against any and all suits, legal proceedings, claims, demands, damages, costs and attorney's fees incident to any infringement or to any claimed infringement of any patent or patents in the manufacture, sale or use of any materials, equipment or apparatus furnished by the Contractor or the Works.

4. SUPPLEMENTARY CONDITIONS

4.1 Tender Price

4.1.1 General

Tenders shall be firm, not subject to escalation and in Canadian funds and shall include all supervision, labour, plant, materials (except as otherwise specified), equipment, personal safety equipment, tools, fuel, consumables, indirect costs, insurance, Workers' Compensation, Vacation Pay Assessments, Canada Pension Plan, Employment Insurance,

and all other payroll burdens; together with all applicable freight, and duty; the Contractor's overhead and profit; cost of bonds and any other costs detailed or implied in these documents. Harmonized Sales Tax collectable from the Owner by the Contractor shall not be included in the Tender Price.

4.2 Fixed Price Breakdown

4.2.1 The Fixed Price Breakdown for permanent material shall include, but not be limited to, the supply of all supervision, labour, plant, equipment and materials required for the designing, fabricating, manufacturing, painting, shop testing, transporting to the Site and storing of all material to be permanently installed.

4.2.2 The Fixed Price Breakdown for installation shall include, but not be limited to, the supply of all supervision, labour, plant, transportation from site storage, consumables, equipment and all work necessary for the installation and testing of all permanent material.

4.2.3 The trade labour hours are the on-site hours required for the installation of each breakdown item.

4.3 Governing Laws

The Contract shall be deemed to have been made in and shall be construed according to the laws of the Province of Prince Edward Island.

4.4 Tender Validity Period

Tenders shall remain valid for a period of 30 days beginning the day after the submission closing date.

4.5 Foreign Workers

Only Canadian citizens and legal permanent residents have the right to work in Canada. Contractors or visitors who wish to work in Canada require an employment authorization in the form of a Visa, or authorization from an Immigration Officer with the Canada Employment Centre. It is the responsibility of the Tenderer to ensure that, if awarded the Contract, such authorization is to be obtained prior to its workers' arrival at the Canadian border. Otherwise, the successful Tenderer's foreign workers may be denied entry into Canada notwithstanding the prior acceptance of the Tender by the Maritime Electric.

4.6 Dispute Resolution

4.6.1 At any time while this Agreement and any of its provisions are in force, should any dispute or question arise between the parties concerning the interpretation of this Agreement or any part thereof which cannot be resolved by agreement between the parties, then such dispute or question shall be submitted to mediation. The mediation

shall be conducted with the assistance of a skilled and experienced mediator chosen by the Contractor from a list of mediators proposed by the Maritime Electric. The cost of mediation shall be borne by the parties equally.

4.6.2 Failing agreement through such mediation, then within five (5) days after the mediation has failed, the dispute or question shall be settled by binding arbitration in accordance with the Arbitration Act (Prince Edward Island), by one party giving notice to the other parties. The arbitration shall be conducted with the assistance of a skilled and experienced arbitrator chosen by the Contractor from a list of arbitrators proposed by the Maritime Electric.

4.6.3 The determination of the arbitrator shall be in writing and shall be final and binding upon the parties and no appeal shall be taken there from. The cost of arbitration shall be borne by the parties equally.

4.6.4 For greater certainty, the Arbitration Act (Prince Edward Island) shall apply to arbitrations of disputes under this Agreement.

4.7 Guarantee

The Contractor shall guarantee that the Works shall satisfactorily perform the function for which it was intended and be free from defects. They shall at the convenience of Maritime Electric, replace, repair and install without charge to Maritime Electric any of the Works or parts thereof which prove defective as a result of faulty design, materials or workmanship within a period of thirty six (36) months after energizing unless a longer period is specified elsewhere in the Contract with respect to the whole or any part of the Works.

If the Contractor replaces or renews any portion of the Works, the provisions of this clause shall apply to the portion of the Works so replaced or renewed as if that portion had been completed on the date of replacement or renewal. The portions of the Works affected by such replacement or renewal shall pass any final tests that were required by the Contract to be performed before the Completion Certificate was issued and all the provisions of the Contract concerning testing prior to issuance of a Completion Certificate shall apply.

In the event of default on the part of the Contractor in performing such replacement or renewal, Maritime Electric may perform the work and hold the Contractor liable for the costs thereof and may deduct such costs from any monies due or that become due to the Contractor.

4.8 Additional Information Requested with Tender

The Tenderer shall provide details with their Tender or within two working days of receiving a request from the Maritime Electric for additional information.

4.9 Indemnification

During the term of this agreement, and subject to the immediately following provisos, the Contractor shall indemnify and save harmless Maritime Electric and the Engineer from and against all loss, costs, damages and expenses occasioned to Maritime Electric and the Engineer by any act, omission, fault, default or negligence of the Contractor or those for whom the Contractor is in law responsible; provided, and it is expressly understood and agreed by and between the parties that the Contractor shall be in no way be responsible to Maritime Electric and the Engineer under the provisions of this paragraph unless a claim in writing is made against the Contractor within ninety (90) days from and after the date on which the loss or damage event was discovered or ought reasonably to have been discovered by Maritime Electric and the Engineer . The indemnity contained in this agreement shall not be prejudiced by, and shall survive, the termination of this agreement.

During the term of this agreement and subject to the immediately following provisos, the Contractor shall indemnify and save harmless Maritime Electric and the Engineer from and against all loss, costs, damages and expenses occasioned to third parties by any act, omission, fault, default or negligence of the Contractor or those for whom the Contractor is in law responsible; provided, and it is expressly understood and agreed by and between the parties that the Contractor shall be in no way be responsible to Maritime Electric and the Engineer under the provisions of this paragraph unless a claim in writing is made against the Contractor within ninety (90) days from and after notice of a claim of such third party in respect of the matter is given to Maritime Electric and the Engineer . The indemnity contained in this agreement shall not be prejudiced by and shall survive the termination of this agreement.

4.10 Insurance

At the Contractor’s cost, the Contractor shall provide and maintain during the entire Term of this Agreement Commercial General Liability insurance of $5,000,000, naming the Owner as an additional insured and shall provide the Owner with proof thereof satisfactory to the Owner.

At the Contractor’s cost, the Contractor shall provide and maintain during the entire Term of this Agreement the following commercial general insurance extensions and shall provide the Owner with proof thereof.

a. All Premise and Operations Liability
b. Products and Completed Operations
c. Blanket Contractual Liability
d. Contingent Employers Liability
e. Non-Owned Automobile
f. Owner’s and Contractor’s Protective Liability
g. Occurrence Based Property Insurance

h. Broad Form Property Damage Including Completed Work
i. Broad Form Automobile
j. Fire Fighting Expense
k. Medical Payments
l. Employee as Additional Insured
m. Cross Liability
n. Personal Injury

At the Contractor's cost, the Contractor shall provide and maintain during the entire Term of this Agreement Automobile Third Party Liability.

4.11 Workers Compensation Board of Prince Edward Island and New Brunswick

The Contractor must be registered with the Workers Compensation Boards of Prince Edward Island New Brunswick and remain in good standing with the Boards.

The Contractor shall, upon request by the Owner, provide evidence to Maritime Electric of good standing with the Workers Compensation Board of Prince Edward Island and New Brunswick.

The Contractor can request Workers Compensation coverage from their home province while performing the work. Evidence of this coverage will be required.

4.12 Health and Safety

The Contractor is required to adhere to all applicable legislation, regulations, Maritime Electric standards and work methods including but not limited to the PEI Occupational Health and Safety Act and Regulations, the Maritime Electric Standard Protection Code, and all pertinent Maritime Electric Safe Work Methods and Procedures.

Maritime Electric may terminate the Contract should the Contractor breach the requirements of the Contractor Health and Safety requirements.

The Contractor must complete a Health & Safety Awareness Training Session provided by Maritime Electric. This training session will generally be conducted with the Environmental Awareness Training with a duration of approximately one and one half hour.

4.13 Environment

The Contractor is to follow the PEI Department of Transportation and Public Works Environmental Protection Plan.

The Contractor must comply with all applicable Federal, Provincial and Municipal environmental legislation, rules, regulations and requirements of all authorities having

jurisdiction which are in force or come into force during the performance of the Work by the Contractor during this Agreement.

a. All other environmental procedures used by the Owner of which the Contractor is made aware (spill kits on site at all times).

b. Such other rules and regulations as the Maritime Electric may establish.

The Contractor must have WHMIS certification.

The Contractor must complete a General Environmental Awareness Training session provided by Maritime Electric. This training session will generally be completed with the Health & Safety Awareness Training.

5.0 SPECIFICATION

Stantec Consulting Ltd.
845 Prospect Street
Fredericton, NB E3B 2T7
Tel: (506) 452-7000

SPECIFICATION FOR BORDEN SUBSTATION AND CAPE TORMENTINE RISER STATION CONSTRUCTION

THE ASSOCIATION OF PROFESSIONAL ENGINEERS OF THE PROVINCE OF PRINCE EDWARD ISLAND
VALID FOR THE YEAR 2016
Collin Sleep
No. 1223
DATE: 22. Apr. 2016
LICENSED PROFESSIONAL ENGINEER
PROVINCE OF PRINCE EDWARD ISLAND

SEAL OF THE ENGINEER OF RECORD

MARITIME ELECTRIC COMPANY LTD.
P.O. BOX 1328
CHARLOTTETOWN, PE C1A 7N2

SPECIFICATION NO. 133546898S301

PROJECT NO. 133546898_23_1

STANTEC CONSULTING LTD.
845 PROSPECT STREET
FREDERICTON, NEW BRUNSWICK
E3B 2T7

M. Wright
PROJECT MANAGER OR DESIGNATE

CIVIL ENGINEERING LEAD OR DESIGNATE

ENGINEERING MANAGER OR DESIGNATE

SUBSTATION ENGINEERING LEAD OR DESIGNATE

PROTECTION & CONTROLS ENGINEERING LEAD OR DESIGNATE

April 20, 2016

Initialed by Document Control: _____
Date: _____

DIVISION 1 - GENERAL REQUIREMENTS

Section 010005 - Summary of Work

Section 010010 - General Items

Section 010020 - Alternatives

Section 010025 - Coordination

Section 010030 - Field Engineering

Section 010035 - Regulatory Requirements

Section 010040 – Health and Safety

Section 010045 - Project Meetings

Section 010050 - Submittals

Section 010055 - Quality Control

Section 010060 - Temporary Utilities

Section 010065 - Security

Section 010070 - Temporary Controls

Section 010080 - Traffic Regulations

Section 010085 - Field Offices, Storage and Laydown Areas

Section 010090 - Commissioning

Section 011000 – Materials and Equipment

Section 013543 – Environmental Protection

Section 017412 - Reinstatement

DIVISION 3 – CONCRETE

Section 031000 - Concrete Forming and Accessories

Section 032000 - Concrete Reinforcing

Section 033000 - Cast-in-Place Concrete

DIVISION 5 – METALS

Section 051223 - Structural Steel

DIVISION 26 - ELECTRICAL

Section 260005 - Electrical General Requirements

Section 260010 - Grounding

Section 260015 - Lightning Protection

Section 260020 - Substation Lighting

Section 260030 - Trenching

Section 260035 - High Voltage Buswork & Insulators

Section 260040 – High Voltage Power Cables

Section 260045 - Low Voltage Power Cables

Section 260050 - Control Cables

Section 260055 - Fiber Optic Cables

Section 260065 - Cable & Wire Identification

Section 260075 - 138 kV Circuit Breakers

Section 260080 - 138 kV Reactor Circuit Switchers

Section 260085 - 138 kV Disconnects

Section 261005 – Cape Tormentine PCT Building Electrical

Section 260090 - 138 kV Potential and Current Transformers

Section 260095 - 138 kV Reactors

Section 261000 - Construction Check-Out

DIVISION 31 – EARTHWORK

Section 310010 - Earthwork and Site Grading

Section 313529 - Secondary Containment Systems – Geosynthetic Barrier

DIVISION 32 – EXTERIOR IMPROVEMENTS

Section 323113 - Chain Link Fences and Gates

Section 329100 - Topsoil, Finished Grading and Seeding

DIVISION 33 – UTILITIES

Section 334100 - Culverts

APPENDICES

Appendix I	Drawing List
Appendix II	Fencing Standard Details
Appendix III	Tender Submission Form
Appendix IV	Geotechnical Report
Appendix V	Intent to Bid Form
Appendix VI	Protection, Control and Telecom Philosophy

1. SCOPE OF WORK

1.1 The Contractor shall supply all supervision, labour, plant, transportation, materials and equipment (except as otherwise specified) and do all Work necessary for the completion of the Borden Substation and Cape Tormentine Riser Station in accordance with all of the specifications and drawings which form a part of this Contract. Such Work shall be performed under the direction and to the satisfaction of the Engineer. The Contractor shall reference Appendices I to IV in the execution of the Work.

1.2 **Borden Substation**

.1 The scope of work includes the construction of access roads and a gravel pad for the Borden substation in accordance with the plans and specifications. In general, the civil scope of work shall include the following:

.1 Supply and installation of erosion control measures as per PEI Provincial standards, including maintenance of the structures for the duration of construction and until restoration is complete.

.2 Remove all organic material from the areas to be constructed and stockpile the material on site.

.3 Excavate to subgrade elevation as indicated on the drawings. Excavated material may be utilized in fill areas, upon approval from the Engineer. All excess material shall be stored on site. Refer to the geotechnical report in this specification for additional information.

.4 Supply, place, compact and grade the select borrow and granular layers as indicated on the drawings, and in accordance with Provincial standards.

.5 Complete all ditching and swales as indicated on the drawings to provide positive drainage on the site. Supply, place and install culverts as indicated.

.6 Supply and installation of the chain link fence, vehicle and personnel gates and related appurtenances as indicated on the plans and details.

.7 Trenching from new substation to existing substation for X3 power and control cables. This work is to be performed when the existing substation is energized.

.8 Reinstate all surfaces to pre-construction conditions.

.2 This scope of work covers the structural requirements for the Borden Substation. The structural scope of work shall include the following:

.1 Supply and installation of equipment foundations.

.2 Supply, fabrication and installation of structural steel equipment supports.

.3 Supply and installation of oil containment systems for two (2) new reactors in the new substation and one (1) existing X3 transformer in the existing substation. The X3 transformer will be de-energized when the oil containment system is being installed, but the rest of the substation will be energized.

.4 Equipment foundations and riser structures in existing substation for X3 power cables installation. This work is to be performed while the existing substation is energized.

.3 This scope of work covers the electrical requirements for the Borden Substation. The electrical scope of work shall include the following:

.1 Installation of nine (9) Owner supplied 138kV SF6 gas insulated circuit breakers.

.2 Installation of two (2) Owner supplied 138kV – 30 MVAR reactors.

.3 Installation of two (2) Owner supplied 138kV RL circuit switches.

.4 Installation of twenty (20) Owner supplied 138kV manually operated disconnect switches.

.5 Installation of six (6) Owner supplied 138kV motorized disconnect switches with grounding switch.

.6 Installation of two (2) Owner supplied 138kV – 120/240V, 75kVA station services transformers.

.7 Installation of three (3) Owner supplied 138kV direct buried single phase power cables to the existing 138kV-69kV X3 transformer in the existing adjacent substation. This work is to be performed while the existing substation is energized.

.8 Supply and installation of conduit system for control cables from existing X3 transformer and circuit breaker in the existing substation to the new substation. This work is to be performed while the existing substation is energized.

.9 Supply and installation of substation grounding system.

.10 Supply and installation of 138kV high voltage buswork, drop leads, connectors, insulators, etc.

.11 Supply and installation of substation lightning protection system.

.12 Supply and installation of cable trenches and conduit systems for substation power and control cables.

.13 Supply, installation and termination of power and control cables.

.14 Supply and installation of substation lighting system.

.15 Supply and installation of miscellaneous materials for the complete installation of the substation equipment.

.16 Installation, connection, assembly, construction checkout and commissioning of the complete substation electrical system.

1.3 **Cape Tormentine Riser Station**

.1 The scope of work includes the construction of access roads and a gravel pad for the Cape Tormentine Riser Station in accordance with the plans and specifications. In general, the civil scope of work shall include the following:

.1 Supply and installation of erosion control measures as per New Brunswick Provincial standards, including maintenance of the structures for the duration of construction and until restoration is complete.

.2 Demolish existing barn foundation.

.3 Remove all organic material from the areas to be constructed and stockpile the material on site.

.4 Excavate to subgrade elevation as indicated on the drawings. Excavated material may be utilized in fill areas, upon approval from the Engineer. All excess material shall be stored on site. Refer to the geotechnical report in this specification for additional information.

.5 Supply, place, compact and grade the select borrow and granular layers as indicated on the drawings, and in accordance with Provincial standards.

.6 Complete all ditching and swales as indicated on the drawings to provide positive drainage on the site. Supply, place and install culverts as indicated.

.7 Supply and installation of the chain link fence, vehicle and personnel gates and related appurtenances as indicated on the plans and details.

.8 Reinstate all surfaces to pre-construction conditions.

.2 This scope of work covers the structural requirements for the Cape Tormentine Riser Station. The structural scope of work shall include the following:

.1 Supply and installation of foundations for equipment and building.

.2 Supply, fabrication and installation of structural steel equipment supports.

.3 Supply and installation of control building.

.3 This scope of work covers the electrical requirements for the Cape Tormentine Riser Station. The electrical scope of work shall include the following:

.1 Installation of four (4) Owner supplied 138kV motorized disconnect switches with grounding switch.

.2 Installation of one (1) Owner supplied 138kV motorized disconnect switch.

.3 Installation of one (1) Owner supplied 138kV – 120/240V, 75kVA station services transformer.

.4 Installation of six (6) NB Power supplied revenue metering tanks on new structures (three per transmission line).

.5 Supply and installation of substation grounding system.

.6 Supply and installation of 138kV high voltage buswork, drop leads, connectors, insulators, etc.

.7 Supply and installation of substation lightning protection system.

.8 Supply and installation of cable trenches and conduit systems for substation power and control cables.

.9 Supply, installation and termination of power and control cables.

.10 Supply and installation of substation lighting system.

.11 Supply and installation of telecommunications and controls equipment as per the drawings and specifications. The Contractor will supply and install an empty telecommunications cabinet and NB Power will supply and install required telecommunications equipment inside the cabinet.

.12 Supply and installation of DC station services equipment in the control building as per the drawings and specifications.

.13 Supply and installation of AC station services equipment in the control building as per the drawings and specifications.

.14 Supply and installation of control building services as per the drawings and specifications.

.15 Supply and installation of miscellaneous materials for the complete installation of the riser station equipment.

.16 Installation, connection, assembly, construction checkout and commissioning of the complete substation electrical system.

.4 The Contractor shall conduct all work and operations in complete accordance with all applicable Federal, Provincial and Local laws, Rules, Regulations and Codes, and in accordance with the Contract General Requirements including, among others, the Environmental Protection requirements, the Quality Control procedures and the Project Safety requirements as established or to be established throughout the duration of the work.

2. WORK BY OTHERS

2.1 The Contractor will work in close proximity with other contractors. These will include, but not be limited to, the following:

2.2 **Borden Substation**

.1 E504 – PCT Building Supply and Installation:

The PCT Building will be constructed on-site by others. The building is anticipated to be completed in early July and the protection and controls installation within the building will be completed in September. It is anticipated that the building will be ready to be turned over to the Owner by October 4. All equipment within the building will be completely supplied, installed and wired by others.

The Contractors scope of work will include all cabling and terminations between the PCT building and the devices in the substation yard, as per the cable schedule. The current transformers will be cabled directly to the P&C cabinets, but the remainder of the P&C cables will be wired to the field marshalling panels within the building.

.2 LS Cable – Subsea Cable Installation:

.1 LS Cable will be responsible for installing the subsea cables underground to the riser station and connection to the termination points on the riser station. The cable vendor will supply and install terminations, lightning arrestors and any associated accessories necessary to connect the cable system to the overhead cable at the riser termination structures. They will also be responsible for grounding the subsea cables to the substation grounding system, which includes the installation of a grounding link box on the riser station structure. The vendor will also be responsible for the installation of the subsea cable internal fiber optic cable to the fiber optic patch panel inside the control building.

.2 The Contractor shall be responsible for the trenching within the substation for the installation of the cable.

.3 Owner – Overhead Transmission Lines:

.1 The Owner will be responsible for installing and terminating overhead transmission lines to the outgoing structures for Y107, Y109 and Y113.

.4 X3 – 138 kV Direct Buried Cables:

.1 The Contractor is responsible for the cable trench, riser structures and installation of the three (3) single phase direct buried power cables from the new substation to X3 transformer in the existing substation. All the work within the existing substation will be performed while the substation is energized. The cable termination preparation will be the responsibility of the cable vendor.

2.3 **Cape Tormentine Riser Station**

.1 NB Power – Overhead Transmission Lines:

.1 NB Power will be responsible for installing and terminating the two (2) overhead transmission lines from Memramcook to the incoming line structure within the riser station.

.2 LS Cable – Subsea Cable Installation:

.1 LS Cable will be responsible for installing the subsea cables underground to the riser structure and connection to the termination points on the riser structure. The cable vendor will supply and install terminations, lightning arrestors and any associated accessories necessary to connect the cable system to the overhead cable at the riser termination structures. They will also be responsible for grounding the subsea cables to the substation grounding system, which includes the installation of a grounding link box on the riser station structure. The vendor will also be responsible for

the installation of the subsea cable internal fiber optic cable to the fiber optic path panel inside the control building.

.2 The Contractor shall be responsible for the trenching within the substation for the installation of the cable.

3. SUPPLIED BY OWNER

3.1 The Owner has purchased equipment that will be installed under this contract. This equipment includes, but is not limited to, the following:

.1 The Owner will supply the 138kV circuit breakers purchased under the Owner's supply contract S501.

.2 The Owner will supply the 138kV potential and current transformers purchased under the Owner's contract S502.

.3 The Owner will supply the 138kV switches and disconnects supplied under the Owner's contract S503.

.4 The Owner will supply the 138kV RL circuit switches for the reactors under the Owner's contract S505.

.5 The Owner will supply the 138kV, 30 MVAR reactors.

.6 The Owner will supply the 138kV power cables and terminations from the new substation to the existing X3 transformer under the Owner's contract S506. The Contractor will be responsible for the trenching between the new and existing substations and the installation of the cables.

.7 The Owner will supply and install the PCT building under the Owner's contract S504. The PCT building will be constructed on-site.

.8 NB Power will supply the revenue metering tanks to be installed by the Contractor. NB Power will supply and install the revenue metering cabinets, cables from the tanks to the cabinets and cables from the revenue metering cabinets to the telecommunications cabinet.

.9 NB Power will supply and install the telecommunications equipment associated with the revenue metering communications inside the Contractor supplied cabinet (P302).

4. SCHEDULE DATES

4.1 The following is a list of key Contract dates for the Work. Schedule start dates are subject to review by the Owner as Work progresses. The Contractor shall supply sufficient manpower, resources and materials to meet the key Contract dates.

4.2 **Key Contract Dates**

.1 Contract award date (tentative) – June 10, 2016.

.2 Start date on-site (tentative) – July 4, 2016.

.3 Construction Complete – October 21, 2016.

.4 Commissioning – October 22 to November 25, 2016.

.5 Turnover to Owner – November 25, 2016.

4.3 **Owner Supplied Equipment Delivery Milestones**

.1 S501 – 138kV Circuit Breakers – August 19, 2016.

.2 S502 – 138kV PT & CTs – August 19, 2016.

.3 S503 – 138kV Switches and Disconnects – September 23, 2016

.4 S504 – PCT Control Building Turnover – October 11, 2016.

.5 S505 – 138kV RL Circuit Switchers – September 10, 2016

.6 S506 – 138kV X3 Power Cables – September 8, 2016.

.7 30 MVAR Reactors – September 2, 2016.

5. CONTRACT SCHEDULE

.1 The Contractor shall provide a tentative schedule with the bid submission. A detailed contract schedule is required within two weeks of contract award. The schedule will be reviewed and approved by the Owner and Engineer.

.2 The Contractor shall do everything necessary to ensure that progress does not fall behind that shown on the Contract Schedule.

.3 If, during the course of construction, the rates of working and schedule of operations fall below those agreed so that, in the opinion of the Engineer, the Contractor shall not be able to complete all portions of the Work by the time as specified, then the Engineer may order the Contractor to increase its Work force or supplement the equipment on Site to accelerate the rate of construction.

.4 The Owner shall be under no obligation to accept any claims for extra payment or extension of time due to delay unless, in the Engineer's opinion, the delay has been caused by conditions outside the control of the Contractor, other than inclement weather. No consideration will be given for delays due to inclement weather.

.5 Refer to Submittals Section 010050 for schedule submittals and additional schedule requirements.

END OF SECTION

1. JOB SUPERINTENDENT

1.1 The Contractor job superintendent shall have the responsibility and authority to administer the Contract on the Site in the interest of the Contractor. The Superintendent shall not have any duties which are not directly related to this Contract. Excepting absences for vacation or for business reasons connected with the administration of this Contract, the Superintendent shall be in attendance on the Project Site each day of the basic work week.

2. COMMENCEMENT OF WORK

2.1 Unless otherwise directed by the Engineer, the Contractor shall commence the Work within seven calendar days of notice of acceptance of the Tender by the Owner. Unless otherwise specified by the Engineer, the Work shall continue without interruption and the Work shall be completed within the time specified.

3. SUBCONTRACTING

3.1 Except for subcontracting to named subcontractors proposed by the Contractor in its accepted Tender, neither the whole nor any part of the Work may be subcontracted by the Contractor without the consent of the Engineer.

4. COMPLETENESS OF DOCUMENTS

4.1 The Contractor shall ensure that it and its Subcontractors are in possession of all parts of all documents listed or referenced in the Contract Documents as are required for performance of the Work.

4.2 Should the Contractor find discrepancies in, or omissions from the documents, it shall at once advise the Engineer.

5. BUILDING PERMITS

5.1 The Contractor shall obtain and pay for all permits required to construct the substation in Borden, PEI and the riser station in Cape Tormentine, NB.

6. TRANSPORTATION

6.1 The Contractor shall obtain and pay for all permits from the Provincial Department of Transportation in advance of moving heavy equipment or hauling heavy or oversized loads over provincial highways.

6.2 The Contractor shall be responsible for determining the limitations and regulations applying to rail, wharf, and highway facilities.

7. RELEASE OF CONTRACTOR'S SUPERVISORY STAFF

7.1 The Contractor shall not release any of its supervisory staff from the Site without having obtained approval from the Engineer. It is mandatory to have the same supervisory staff for the duration of the project.

END OF SECTION

1. MATERIAL SUBSTITUTION

1.1 In order to specify the quality and type of materials required for the Work, trade names, government standards and manufacturer's names may have been used in the technical specifications and on the drawings. The Contractor shall not substitute any other materials for any materials specified without prior written approval of the Engineer.

1.2 If the Contractor wishes to make a substitution for materials specified it shall submit its request to the Engineer accompanied by complete information on the physical characteristics, qualities and performance of such materials to be substituted. If requested by the Engineer, the Contractor at its own expense shall submit to the Engineer for comparison purposes samples of both the specified materials or equipment and the proposed substitutes.

1.3 The decision of the Engineer shall be final as to the quality or approval of any materials which the Contractor proposes to substitute. Any cost savings as a result of such substitutions shall be passed on to the Owner.

END OF SECTION

1. COORDINATION WITH OTHER CONTRACTORS AND THE OWNER

1.1 The Work for this project demands the application of efficient, well organized and engineered construction methods. The overall installation schedule for this project shall result in a number of activities being carried out by other contractors and the Owner at the same time within restricted areas. Limitations as to access, available storage and work laydown or staging areas must be accepted.

1.2 The Contractor shall be allowed as much flexibility as possible in the selection of its own planning methods. However, the Owner's requirements outlined in this specification are mandatory.

1.3 The Contractor shall coordinate and cooperate with all other contractors and the Owner working in the area so that all Work may be done in an efficient and orderly manner. The Contractor shall note the proximity of other contractors and the Owner working in the area and the effect it may have on the Contractor's work.

1.4 Weekly coordination meetings will be held at the site. The Contractor shall participate for coordination of their work with the Engineer and the other Contractors on site.

END OF SECTION

1. GRADES, LINES AND LEVELS

1.1 The Engineer shall establish basic co-ordinate points and two bench marks in the general area of the Work. The Contractor shall be responsible for the preservation of all survey reference points as set or established by the Engineer. Any errors entering into the Work through failure of the Contractor to notify the Engineer concerning lack of preservation of such survey reference points shall be made good at the Contractor's expense. The Contractor shall provide sufficient, safe and proper facilities at all times for layout of the works.

1.2 The Contractor shall lay out the works from the aforementioned basic control points and bench marks and shall assume all responsibility for the correctness of such laying out. It shall supply, establish and maintain at its own expense, all additional survey reference points and other work lines and levels necessary to perform the works.

1.3 The Engineer may, at any time, check the Contractor's surveys and layout work but this shall not relieve the Contractor of any of its responsibility to carry out the works in accordance with the Contract.

1.4 When necessary, Work shall be suspended to permit the Engineer sufficient time to carry out its survey work, but such suspension shall be as brief as practicable.

END OF SECTION

1. CODES AND STANDARDS

1.1 Codes and Standards have been listed under some Divisions which, along with the provisions of the Contract Documents, and unless superseded in part by the Contract Documents, shall apply as if written out herein in full. The Contractor shall obtain such standards for its use and shall at no time claim that specific requirements of the standard governing work under this Contract were unknown to it. A copy of each standard shall be kept in the Contractor's field office for use by its Superintendent and/or Subcontractors.

1.2 The publications of the organizations, societies and standards listed in this document form part of this document to the extent referred to in the various Divisions. Where requirements of the codes and standards conflict with the requirements of the section in which they appear, the more stringent provisions shall govern. Reference to standards, codes, specifications and recommendations shall mean the latest edition of such publications adopted and published at the date of invitation to submit Tenders unless otherwise specified herein.

END OF SECTION

1. SAFETY

1.1 General

.1 The Contractor shall observe and comply with all requirements of the NB and PEI Occupational Health and Safety Act and Regulations. The Contractor shall also be familiar with and comply with all requirements of the MECL Corporate Safety Manual.

1.2 Health & Safety Management Program

.1 The Contractor must submit a health & safety management program that identifies the steps that will be taken by the Contractor to ensure the health & safety of their employees, Owner's and engineering consultant's employees, subcontractors and the general public. The program must meet or exceed the expectations identified within this tender document.

.2 General Safety Policy:

.1 The Contractor must supply a written general safety policy indicating their commitment to provide the highest practical standards of health & safety to protect their employees, Owner's and engineering consultant's employees and the general public.

.2 This policy must be signed by the Contractor's senior management and be posted in prominent areas within the work site.

.3 This policy must be reviewed with all Contractor's employees during the Contractor's orientation.

.3 Safety Supervisor:

.1 All Contractors are required to have a safety supervisor. The name of the safety supervisor must be submitted to the Engineer prior to the commencement of work.

.2 Should the Contractor have less than fifty employees on site whose regular responsibilities are field oriented (non-administrative in nature), a working supervisor shall be designated as the safety supervisor. He/she will be responsible for managing the Contractor's health & safety program.

.3 Should the Contractor have greater than fifty employees and less than one hundred and fifty employees on site, whose regular responsibilities are field oriented (non-administrative in nature), a full time designated safety supervisor is required. Their primary responsibility will be to manage the Contractor's health & safety program.

.4 The safety supervisor(s) must have completed formal loss control management training through a recognized agency. Name, qualifications, and contact information of the designated safety supervisor must be submitted to the Engineer and Owner prior to commencement of work.

.5 The number of employees related to the number of designated safety supervisors indicated in the previous paragraphs shall be those directly under the Contractor and the subcontractors. The Contractor is responsible for their own forces and those of their subcontractors and shall provide the number of designated safety supervisors as indicated by the guidelines for the total number of employees above.

.4 Joint Health & Safety Committee and/or Health & Safety Representative:

.1 All Contractors with twenty or greater employees on site are required to establish a Joint Health & Safety Committee (JHSC). Should there be less than twenty but greater than four employees on site, a safety representative shall be appointed by the employees on site.

.2 The JHSC and/or the safety representative shall be trained in their responsibilities as per the requirements of the Occupational Health & Safety Act.

.3 The Contractor must identify within their health & safety management program, how their JHSC and/or safety representative will fulfill their responsibilities.

.5 WHSCC and WCB Compliance and/or Stop Work Orders:

.1 WHSCC (NB) and/or WCB (PEI) has the authority to stop work or write compliance orders to all employer/employees under their jurisdiction.

.2 The Contractor must immediately address all work stoppages and compliance orders written by WHSCC or WCB to their satisfaction.

.3 All compliance or stop work orders written by WHSCC or WCB to the Contractor must be reported immediately to the Engineer.

.6 Disciplinary Action:

.1 The Contractor will include in their health & safety program a disciplinary process for employees who fail to comply with safety requirements.

.7 Inspections:

.1 General inspections of the work site are required to ensure that unsafe work practices and unsafe conditions are identified and corrective action taken.

.2 Regular work site inspections will take place over the course of the contract by the Contractor designated safety supervisor and other personnel (i.e. Joint Health & Safety Committee) as is necessary to ensure the safety of all Contractor's employees, Owner's and engineering consultant's employees and the general public.

.3 The Contractor will identify in their health & safety management program how they will manage work site inspections.

.4 MECL and the Engineer may carry out inspections as deemed necessary. They also reserve the right to review the inspection reports completed by the Contractor.

.5 Unsafe acts and conditions identified during inspections will be corrected in a timely manner to maintain safety on the work site.

.8 Pre-use Inspections:

.1 A pre-use inspection of all tools and equipment is required to ensure they are in safe operating order and that their use will not place the employee and/or personnel in the vicinity at risk.

.2 The Contractor will identify in their health & safety management program, how they will manage pre-use inspections.

.3 Where identified by regulations or manufacturers recommendations, pre-use inspections shall be documented and maintained for the length of the contract.

.4 MECL or the Engineer reserves the right to review documented pre-use inspection reports completed by the Contractor.

.9 Accident/Near Miss Reporting and Investigations:

.1 All accidents and near misses must be reported and appropriately investigated to identify the causes and prevent a recurrence.

.2 The Contractor will identify in their health & safety management program, how they will manage the reporting and the investigation of all accidents and near misses.

.3 All accidents and near misses will be reported to the Engineer. An accident is defined as “an unplanned event that results in harm to people or damage to property (when such damage had the potential to cause harm to people). A near miss is defined as “an unplanned event that, under slightly different circumstances, could have resulted in an accident”.

.4 In addition to the Contractor accident/near miss report, an MECL incident report form shall be filled out for all accidents and near misses. The report shall be provided to the Engineer.

.5 Records of all accidents, near misses and investigations including the corrective actions shall be maintained for the length of the contract.

.6 MECL and the Engineer reserve the right to investigate all Contractor accidents and near misses.

.10 Emergency Preparedness Plan:

.1 To eliminate or reduce potential losses in an emergency, proper emergency planning must be in place for all probable emergencies.

.2 The Contractor will identify in their health & safety management program, how they will respond to scenarios such as medical emergencies, environmental spills or releases, rescue from heights, confined space rescue, site evacuation.

.3 Where applicable, the Contractor will ensure their employees have been oriented to MECL emergency procedures, specific to the work site.

.4 All Contractors must have emergency numbers and the exact civic address and location posted in prominent areas at the work site.

.11 Rules and Work Permits:

.1 The Contractor must include with their health & safety management program a copy of their rules for working safely. As applicable, this shall include, but not be limited to topics such as:

.1 Working at heights.

.2 Hot work.

.3 Use of personal protective equipment.

.4 Lifting and rigging.

.5 Defective tools and equipment tag out procedure.

.6 Use of respiratory protection.

.2 The Contractor safety rules must meet or exceed the rules identified in the MECL Corporate Safety Manual. Where rules do not exist, the MECL Corporate Safety Manual rules shall apply.

.3 In the event of conflicting safety rules, those which provide the highest standard for safety shall be applied.

.4 The Contractor will ensure that the Occupational Health & Safety Act and other applicable acts and regulations are followed.

.5 The Contractor will ensure that project specific health & safety programs are followed.

1.3 **Skills Training**

.1 All Contractors must ensure that their employees are trained to perform their work in a manner that will ensure their safety, the safety of MECL and Stantec employees and subcontractors, and the general public.

.2 All Contractors must be “competent” to perform their assigned task as per Occupational Health & Safety Regulation.

.3 Contractors shall maintain and make available upon request by MECL or the Engineer the training records of all contract employees.

.4 Regulatory training requirements and job specific records shall be provided to the Engineer prior to work commencing.

1.4 **Hazards Training**

.1 All Contractors must ensure that their employees are trained on the hazards that they may be exposed to. This includes general WHMIS training.

.2 The Contractor will specify in their health & safety management program, how they have identified the hazards training needs of their employees.

.3 Contractor’s employees will be required to participate in on-site training for specific site hazards.

.4 Contractors shall maintain and make available upon request by MECL or the Engineer the training records of all employees.

1.5 **Personal Protective Equipment (PPE)**

.1 All Contractors shall supply safety equipment to their employees that meet or exceed the standards identified below:

.1 All safety headwear must meet or exceed ANSI standard Z89.1 1997 Type 1 Class E head protection. The headwear must be in good condition with no conductive attachments or conductive stickers that could reduce the electrical protection of the headwear. The company logo and the employee name must be displayed on the safety headwear.

.2 All safety eyewear must meet CSA Standard Z94.3-99 or a standard offering equivalent protection. All safety eyewear must be equipped with side shields. If prescription eyewear does not meet this standard, over-the-glass safety eyewear meeting CSA Standard Z94.3-99 shall be worn over the prescription eyewear.

.3 All safety footwear must meet or exceed CSA Standard Z195-M92 with sole protection and Grade 1 toe protection and electric shock resistant soles. All safety footwear must be in good condition (i.e. soles not excessively worn and no exposed metal from the steel toe). Footwear meeting the above requirements is marked with an external green CSA triangle and a rectangular white patch with an orange Greek Omega symbol.

.4 The Contractor is responsible to ensure that all other necessary safety equipment such as arc flash, fall protection, face shields, hearing protection, welding clothing, respiratory protection, chainsaw clothing etc. meets or exceeds the standards identified in the MECL Corporate Safety Manual, or where a standard is not specified in the Corporate Safety Manual, the standard identified in the Occupational Health & Safety Regulation shall apply.

1.6 **Health & Hygiene Control**

.1 Control of occupational health hazards is essential to ensure that personnel are not exposed to unnecessary health risks.

.2 The Contractor is required to identify in their health & safety management program how they intend to control hazardous chemicals brought onto the site. How will the chemicals be stored, how will waste and leftover chemicals be removed from site. How and where will MSDS sheets be maintained and stored.

.3 The Contractor is responsible to ensure that all personnel who are required to wear respiratory protective equipment must be respirator fit tested using either qualitative or quantitative fit testing methods. The test must be specific to the type of respirator worn.

1.7 **Communications**

.1 The Contractor will specify in their health & safety management program how they will implement the following communication strategies.

1.8 **Orientation**

.1 All Contractor employees, subcontractors and any other visitors on the site must receive an orientation by the Contractor, to ensure the Contractor expectations have been communicated to the employee. A record of the employees who have attended these orientations must be kept for the duration of the contract.

1.9 **Loss Control (Safety, Toolbox) Meetings**

.1 All Contractors are responsible to ensure that their employees attend a weekly loss control (safety, toolbox) meeting. Meeting minutes shall be recorded and maintained for the duration of the contract. MECL and the Engineer reserve the right to review meeting minutes and audit meetings.

1.10 **Tailboard Conferences (Pre-job Briefings)**

.1 A tailboard conference (pre-job meeting) will be held at the beginning of each job, at the beginning of each shift, and during each job if conditions change. The purpose of this meeting is to:

.1 Discuss the job to be done.

.2 Identify and discuss any hazards present.

.3 Identify ways to control the hazards.

.4 Discuss impact of the job on other jobs and vice versa.

.2 As per site specific policy, documentation of some tailboard conferences may be required.

2. ACCIDENTS

2.1 Any accident, injuries or serious damages shall be reported immediately to the Engineer.

2.2 In addition, the Contractor shall promptly report in writing to the Engineer, all accidents whatsoever arising out of or in connection with the performance of the Work, whether on or adjacent to the Site, which causes death, personal injury or property damage, giving full details and statements of witnesses.

2.3 The Contractor shall follow MECLs critical incident protocol for serious injury or damage.

END OF SECTION

1. PROJECT MEETINGS

1.1 In addition to attending routine project meetings as and when required or arranged with the Engineer, the Contractor's superintendent shall be required to attend weekly construction meetings and safety meetings at the Site and shall be authorized to make binding decisions for its company as they relate to schedules, safety and other job related conditions.

END OF SECTION

1. SCHEDULING

1.1 General

.1 To enable the Work on the project to be planned and executed in an orderly and expeditious manner and to evaluate progress and status of various stages of the project, the Contractor shall utilize a computerized project schedule. The Contractors schedule shall include the work of all its subcontractors and key project milestone dates. The schedules referred to in this Section are defined as follows:

.1 Summary Schedule:

.1 A barchart schedule submitted with the Tender showing all key activities, dates and interfaces.

.2 Contract Schedule:

.1 The Summary Schedule when approved by the Engineer.

.3 Detailed Working Schedule:

.1 The detailed activity list in the form of a barchart prepared by the Contractor and reviewed by the Engineer by which progress is monitored. The Detailed Working Schedule and any future revisions and regular progress updates to it shall be submitted in an electronic format acceptable for electronic input into Microsoft Office or in a format acceptable to both parties.

.2 The Contractor on being notified of Award of Contract, shall designate a person as scheduling coordinator for liaison with the Engineer with respect to planning and scheduling, who shall, within 14 calendar days after Award of Contract, meet with the Engineer to review the scope, preparation, monitoring and update approach to the contract planning and scheduling.

.3 Acceptance by the Engineer of the Contractor's schedules shall not relieve the Contractor of any of its duties and responsibilities under the terms of the Contract.

1.2 Summary Schedule and Contract Schedule

.1 The Tenderer shall submit with its Tender a Summary Schedule in barchart form depicting the logical sequence and relationship of the work to be done by the Tenderer to meet contract completion in accordance with Section 010005. The summary schedule shall indicate but not necessarily be limited to the following:

.1 All major activities to be performed on the project, starting and completion dates, and durations based upon date of Award of Contract as day zero.

.2 Interfaces or restraints between the Contractor's Work and that of the Engineer or other Contractors.

.3 Manpower schedules for field construction Work indicating separately Tradesmen and Contractor's staff.

.4 Anticipated rate of progress for designated quantities.

.5 Indication of the number of shifts per day and Work week basis for construction Work.

.2 The schedule shall be in sufficient detail to assure the Owner that all steps are thoroughly planned to meet the specified dates.

.3 During the pre-award meeting, any major difference between the Summary Schedule and the Engineer's schedule shall be resolved. Award of Contract shall not take place until such differences have been resolved. The jointly approved schedule shall become the Contract Schedule.

1.3 **Detailed Working Schedule**

.1 The Contractor shall submit for approval within two (2) weeks after Award of Contract, and before the first progress payment is made, it’s Detailed Working Schedule in a barchart format. The Schedule shall be in sufficient detail to satisfy the Engineer that the Work is thoroughly planned and meets all requirements of the Contract Documents and shall include, but not be limited to:

.1 Drawings/information required from the Engineer.

.2 Submittals for the Owner's review, indicating the timing and durations allowed for such reviews, including but not limited to:

.1 Design Criteria, Drawings, Data Sheets and Technical Specifications.

.2 Drawing Schedules.

.3 Procurement Schedules.

.4 Procedures including those relating to the issue of Progress Reports, Test Procedures, Quality Assurance, Erection and Commissioning Procedures.

.5 Welding procedures.

.3 Detailed manufacture/construction activities.

.4 Interfaces with the Work of other Contractors.

.5 Planned percent complete construction curve.

.2 The Detailed Working Schedule shall clearly depict the logical sequence and relationship of the activities required to complete the Work and shall also show all logic restraints and interface points required with other Contractors.

.3 The following limitations shall apply to all schedule activities on the Detailed Working Schedule:

.1 Activity durations should be in working days using logical measuring points of quantities or time of accomplishment.

.2 Activity titles shall be self-explanatory; abbreviations shall be shown in a legend on the diagram or in an attachment thereto.

.3 Drawing standards specified elsewhere in the Contract Document shall be used for all schedule drawings.

.4 The Contractor shall, in writing, promptly inform the Engineer of any proposed change in the schedule and shall furnish the Engineer with a revised schedule whenever said changes occur.

.5 The schedule shall allow a minimum of two weeks for the Engineer's review and return of submittals in accordance with 1.3.1.2.

1.4 **Manpower and Construction Equipment Forecast**

.1 The Contractor shall submit to the Engineer within 30 calendar days after notice of Award of Contract, a forecast of its field manpower by trades and field construction equipment requirements to ensure completion of its Work within the specified key dates and the Detailed Working Schedule.

1.5 **Cash Flow Estimate**

.1 The Contractor shall submit for approval within ten calendar days after notice of Award of Contract and before the first progress payment is made, a cash flow estimate. The cash flow estimate shall be expressed in monthly time units and shall show the estimated amount of each month's progress invoice and the estimated accumulative total to the end of each month.

1.6 **Progress Reports**

.1 During the performance of any Work, the Contractor shall submit to the Engineer monthly progress reports indicating actual progress up to the report date. Such reports shall be submitted to the Engineer by the end of the third working day of the month and shall include:

.1 A copy of the Detailed Working Schedule and information noted in Subsection 1.3 indicating progress of various divisions of the Work, stating actual start of the activity, rate of progress (percent complete), forecast time of completion, etc., and any schedule revisions.

.2 A detailed report of critical activities, explaining the remedial action proposed by the Contractor to alleviate any unacceptable condition.

.2 The Contractor shall provide a 21 day look ahead schedule at each weekly progress meeting.

.3 The Contractor shall provide weekly reports by Friday 10:00 hrs indicating:

.1 Manhours worked by trade.

.2 Manpower by trade.

.3 Major quantities complete.

2. APPROVED FOR CONSTRUCTION DRAWINGS

2.1 "Approved for Construction" drawings will be furnished to the Contractor during the progress of the Work and these drawings may be revised from time to time in order to suit conditions encountered during the progress of the Work.

2.2 Drawings shall be issued with the Engineer's standard transmittal form and the Contractor shall without delay, acknowledge receipt of the drawings by signing and returning to the sender the specified copy of the transmittal.

3. SHOP DRAWINGS

3.1 Shop drawings for the purpose of this Contract shall be all submittals required to perform all Work as described and indicated in the Plans and Specifications.

3.2 Shop drawings shall include but not be limited to:

.1 Shop fabrication drawings and material lists.

.2 Engineering design drawings and notes.

.3 Product information sheets.

.4 Technical data and procedures.

.5 Product samples.

.6 Layout sketches and details.

.7 Product application schedules.

.8 Testing schedules.

3.3 For the sections of Work to be done under the Contract where the Contractor is required to submit shop drawings to the Engineer, the Contractor shall submit these shop drawings to the Engineer for review.

3.4 Shop drawings shall be prepared based on the Approved for Construction drawings.

3.5 Shop drawings submitted by the Contractor and involving design work shall bear the stamp of an Engineer registered or licensed to practice in the province.

3.6 When submitting drawings, three copies shall be submitted of each drawing. Drawings shall be prepared in accordance with the latest edition of CSA Standard B78.1 and B78.5. Maximum size for submitted drawings is ANSI E (34” X 44”).

3.7 Shop drawings shall be in sufficient detail to show:

.1 The general arrangement and dimensions of each and every part of the Work to be undertaken or supplied under the Contract.

.2 The material from which the various parts are to be made.

.3 The details of all construction.

3.8 The shop drawings with the imprint of the Engineer's shop drawing stamp shall be returned to the Contractor. One of the following designations shall be indicated on the stamp imprint indicating the result of the Engineer's review:

.1 Reviewed.

.2 Reviewed as Noted.

.3 Not Accepted – Resubmit.

.4 Information Only.

3.9 Shop drawings indicated as "Reviewed" are acceptable and need not be revised or resubmitted.

3.10 Shop drawings indicated as "Reviewed as Noted" shall be revised in the manner indicated and resubmitted for review.

3.11 Shop drawings indicated as "Not Accepted - Resubmit" shall be revised to conform to all requirements of these documents.

3.12 Shop drawings indicated as "Information Only" are retained by the Engineer for information and need not be revised or resubmitted.

3.13 Shop drawings shall be amended by the Contractor and re-submitted as often as necessary to obtain the Engineer's "Reviewed" designation for those shop drawings subject to review.

3.14 The Engineer shall not necessarily examine in full detail all submittals forwarded for its review and may at its option require a submittal to be for information and record purposes.

3.15 No order shall be placed for work requiring shop drawings without authorization in writing from the Engineer, and fabrication or manufacture of any part for which shop or Contractor's drawings are required, shall not commence until the shop drawings have been stamped "Reviewed" or "Information Only" by the Engineer. The Owner is under no obligation to accept or pay for any work not complying with these requirements.

3.16 Amendments to any "Reviewed" shop drawing shall not be made without being reviewed by the Engineer subsequent to the amendment. Proposed amendments shall be reported by sending three copies of each revised drawing to the Engineer for review.

3.17 If the Contractor has received the Engineer's acceptance for the substitution of materials from those specified or for the alteration of design from that shown in the Contract Documents, the shop drawings shall bear a note that material substitutions and design changes have been made and shall provide full details.

3.18 Review by the Engineer of the Contractor's shop drawings shall not relieve the Contractor of its responsibility for the correctness thereof, or for any results arising from errors or omissions or for any fault or defect or for failure in the matter of guarantees which may become evident during construction or subsequent operation.

3.19 The Contractor shall be responsible for any discrepancies, errors, or omissions in the shop drawings and other particulars supplied by it whether such shop drawings and other particulars have been reviewed by the Engineer or not, provided that such discrepancies, errors or omissions be not due to inaccurate information or particulars furnished in writing to the Contractor by the Engineer.

3.20 The Engineer shall have the right to require the Contractor to make any changes to the shop drawings which may be necessary, in the opinion of the Engineer, to make the works conform to the intent of the Contract.

3.21 The Contractor shall supply the Engineer with three copies of each "Reviewed" drawing.

4. AS-BUILT DRAWINGS

4.1 The definition of "As-Built" changes specifically denotes any construction changes which deviate from specific details shown on "Approved for Construction" drawings issued for the project.

4.2 All proposed design and/or field changes must be approved by the Engineer.

4.3 The compiling and recording of "As-Built" changes shall be the responsibility of the Contractor who shall obtain the Engineer's approval before preparing any change or before incorporating the change in the Work.

4.4 The Contractor shall keep an up to date record of any changes by either or both of the following methods:

.1 A specific record set of the "Approved for Construction" drawings identified as the Master File shall be kept in the office of the Contractor for the express purpose of recording changes thereon. Changes, as they occur, are to be clearly added, in red, on the appropriate plans and sections of all affected drawings.

.2 In the event that the changes are extensive, a separate sketch of the affected area may be made showing the changes in the same degree of detail as that on the "Approved for Construction" drawing. The sketches shall be made on Xerox reproduction sheets, not less than letter size, and shall be adequately identified and cross-referenced to the original drawings. These sketches, numbered consecutively and identified according to discipline (e.g., mechanical, electrical, structural), shall be kept on file in the field office along with the Master File of prints recording as-built information.

4.5 The "As-Built" drawing to be submitted to the Engineer for approval shall be an unfolded, full size print with all changes noted only in red, green or black. The print shall be stamped "AS-BUILT".

4.6 The transmittal of the "As-Built" records shall be made through the office of the Engineer.

5. OPERATION AND MAINTENANCE MANUALS

5.1 The Contractor shall furnish bound operation and maintenance manuals in letter size.

5.2 The cover and the first page of each manual and each volume of each manual shall contain the following information in order:

.1 Owner's Name.

.2 Site Location Name.

.3 Name of Equipment (as titles in the Tender Document).

.4 Name of Equipment Manufacturer.

.5 Owner's Tender Document Number.

.6 Owner's Order Number.

.7 Owner's Equipment Number(s).

5.3 A table of contents shall be included complemented by suitable page numbers and list(s) of all manufacturer's drawings.

5.4 All information on drawings and literature shall be in English.

5.5 All dimensions, masses, and measures shall be in Metric units.

5.6 Four copies of the manuals shall be submitted to the Owner for review within 60 days following award of contract. Ten copies shall be submitted to the Owner within six weeks following review.

5.7 The manuals shall be divided into a minimum of two distinct sections or volumes, one for operation, one for installation and maintenance.

5.8 The operation manual shall include a philosophy or concept description of the Equipment and the detailed instructions on how to put the Equipment into, and keep it in operation. Test procedures shall be included. In addition, the operation manual shall contain, but not necessarily be limited to, the following:

.1 Section view of major equipment.

.2 Performance curves including but not limited to - power consumption curves, flow curves, motor characteristics curves, critical speeds, vibrations, etc.

.3 Control schematic drawings with operational explanation.

.4 Lubrication diagrams with list of recommended lubricants and lubricant technical data sheets by at least four suppliers including Irving, Imperial, Petro-Canada and Shell.

5.9 The installation and maintenance manual shall include all information and drawings (section view, detail or shop) to satisfactorily install and maintain the Equipment. In addition, the installation and maintenance manual shall contain but not necessarily be limited to the following:

.1 Technical data and/or specification sheets and operational requirements on every piece of equipment supplied - e.g., instruments, electric, motors, switches, couplings, etc. It is recognized that the Contractor shall, in all likelihood, purchase, for supply as part of its Contract, items from other manufacturers and that many of these shall be off-the-shelf items and be accompanied by general manuals. The Contractor shall, in this case, provide technical data and/or specification sheets on the particular model being supplied and shall cross out sections of the manuals not applicable to items supplied. The operational requirements shall be stated in sufficient detail to allow the Owner to purchase a functionally similar piece of equipment at a later date in case that the one supplied by the Contractor is no longer available.

.2 List of all Equipment supplied. This list must include the following:

.1 Manufacturer.

.2 Supplier.

.3 Address of Manufacturer and Supplier.

.4 Equipment Name.

.5 Equipment type, model, serial number, size rating, etc.

.6 Equipment number and Owner's Stock Code Number.

.7 Cross reference drawings and information.

.8 Special remarks.

.3 Detailed section view and shop drawings, reduced to suitable size, of all Equipment supplied sufficient to identify by name and part number each parts of the equipment supplied, the assembly relationship of one part to another and all critical dimensions, clearances and fits for proper maintenance. All drawings shall be identified as being specific for the Owner's project for which this document is applicable.

.4 Parts lists with accompanying part name, numbers and material name. Bearings must be cross-referenced to the bearing manufacturer and its part number.

.5 A complete check list of all items to be followed during installation.

.6 A complete check list of all items to be followed (checked, inspected, tested, changed, work on) on an overhaul, an explanation of the disassemble and reassemble sequence shall be included.

.7 Torque chart for all critical nuts and bolts to achieve design loading (if any).

.8 Wiring diagrams including terminations and wire numbers.

.9 Instrumentation diagram identifying location and specific type of instrumentation, and instrumentation specification sheets (if any).

.10 List of trip and alarm settings (if any).

.11 The setup of each trip and alarm switch with description and dimension drawing to show the trip point (if any).

.12 A list of all tools supplied with the Equipment. The list shall include an identifying sketch or photograph of each tool and give quantity, size, use, and instructions.

.13 Other information specified by the Owner or the Engineer after Award of Contract.

.14 Any revisions as a result of differences noted during Commissioning shall be revised and updated.

6. CONFORMANCE OF SUBMITTALS

6.1 Each submittal, including shop drawings, schedules and O&M manuals, submitted by the Contractor shall have a title and shall be labeled thus:

"MECL Borden Substation and Cape Tormentine Riser Station Project Contract No. xxxxxx"

It shall also contain:

.1 The Contractor's name and representative's initials.

.2 The Subcontractor's and manufacturer's names when applicable.

.3 The Contract description name.

.4 A reference to the related area or item of work.

.5 The date on which the submittal is prepared for submission.

.6 Contractor's 'Reviewed' Stamp.

6.2 Submittals required to be returned to the Contractor shall be sent to the Contractor by the Engineer within a reasonable period of time from the date of receipt at the Engineer's office, and the Contractor shall allow for transmittal of submittals to and from the Engineer's office. Should circumstance require specific review periods, both parties shall coordinate the scheduling of the affected submittals.

6.3 All submittals shall have dimensions in Imperial units.

END OF SECTION

1. GENERAL

.1 Quality Control for this project is the prime responsibility of the Contractor, who shall ensure that all Work is performed in accordance with the drawings and specifications.

.2 Within 30 days of Contract award, the Contractor shall have a Quality Assurance Program to satisfy the requirement of ISO-9002, or approved equivalent. This system will allow for the planned and systematic management of activities within the Contractor's own organization and those of its Subcontractors such that all aspects of the Work meet the requirements of the Contract.

1.2 Quality Assurance Program

.1 The Contractor shall develop and implement a Quality Assurance Program (QAP) specifically for the Work. The QAP and any revisions thereto shall be subject to the Engineer's review. The QAP shall contain the following as a minimum:

.1 Quality Plan, (Including Discipline Inspection & Test Plans).

.2 Procedures to be applied to and utilized during the Work.

.3 Job descriptions and responsibilities for Key personnel, including the responsibility for compilation and approval of the Quality Plan.

.4 Contractor's Quality Organization Chart.

.5 Internal Audit schedule.

.2 Progress payments will not be paid if documentation is deemed insufficient or not submitted.

.3 The Contractor will designate a Quality Control Manager (QCM) who will be present at the Work Site at all times while the Contractor's work is in progress and will have the authority and responsibility to accept or reject items of work. The Contractor's QCM's Qualification will be submitted to the Engineer for review. Contractor's QCM may be required to attend the Engineer's Quality monthly meeting.

.4 The Contractor's QCM will perform an inspection upon receipt at the site of all material, equipment and supplies. Notes from this inspection will be recorded on the appropriate form and included with the Contractor Daily Quality Control Report. Items which are damaged or not in conformance with the respective Submittals, Quality Standards, Contract Drawings and Specifications, shall be brought to the attention of the Engineer. Items thus identified will be segregated from accepted items and will not be incorporated into the work until they conform to the specification. These items shall be noted as deficient in the applicable section of the Contractor Daily Quality Control Report.

1.3 Quality Plan

.1 The Quality Plan is a comprehensive planning document detailing discipline activities, procedures, codes, rules and regulations applicable to the Work.

.2 The Quality Plan shall identify all interfaces between and within Contractor's Organization and its Subcontractors, and with the Engineer.

.3 The Quality Plan shall contain sufficient detail to demonstrate the nature and extent of control from Contract award to completion and final submission of as-built documentation.

.4 The Quality Plan shall address all inspection and testing activities in the form of an Inspection and Test Plan. An ITP is required for each type of Work.

.5 Inspection & Test Plans should include the following information:

.1 Activities Reference – allocated sequentially to each described activity within the process.

.2 Description of Operation/Test/Inspection – description of the activity.

.3 Control Document Reference – shall identify the qualification, procedure or instruction reference used to control the activity.

.4 Activity Record – shall identify the document produced as objective evidence of satisfactory completion of the activity in conformance with the requirements.

.5 Subcontractor Quality Plan – shall identify and reference to a subcontractor's Quality Plan.

1.4 **Procedures**

.1 Contractor shall maintain and implement a comprehensive set of procedures that the Contractor will use to control work completed by the Contractor and its Subcontractors. These procedures shall address all steps necessary to complete the Contract. These procedures shall be available for the Engineer's audit and review at all times. The Contractor shall supplement existing procedures or develop additional procedures as may be necessary where the Engineer deems the available procedures to be inadequate. The Contractor shall conduct internal audits on the implementation of all utilized procedures and the results of the audits shall be forwarded to the Engineer.

1.5 **Job Descriptions**

.1 The Contractor shall describe the activities and responsibilities for each key position within the Contractor's and it's Subcontractor's organization(s). The job description shall set out the lines of reporting, (above and below the position), authority limitations and the level of qualifications and experience required by the position.

1.6 **Organization**

.1 The Contractor shall describe the organization to manage the Work, including any Work performed by Subcontractors. The organization shall be set out in a clear and logical organization chart supported where necessary by a narrative description. Key positions shall be identified. The Contractor shall address the extent of their inspection, including the numbers of personnel involved and the involvement at Subcontractor's facilities for witness/hold points.

1.7 **Quality System Corrective Action**

.1 The Contractor shall create and utilize a procedure for formally documenting any deficiencies in its quality system and for corrective actions and closure of such deficiencies.

1.8 **Certification and Documentation**

.1 The Contractor shall be responsible for obtaining certification of all Contractor supplied Specifications, Drawings, Procedures, Quality Control Reports, test results, equipment and Material Certification, etc. required to fulfill the requirements of the Contract and Government Regulations.

.2 The Contractor shall be responsible for maintaining original or verified copies of material test certificates for Contractor supplied material used in the Work. Material supplied by the Owner will be identified, either with unique identification attached or with the material grade identification. The Contractor shall be responsible for ensuring that only goods with identification are used in the Work, and for ensuring that materials issued to them are identifiable at all times. Any material not bearing the appropriate material grade identification shall not be used in the Work.

.3 The Contractor shall ensure that all components and materials shall be clearly marked in accordance with Contractor's procedure for identification. The procedure for identification shall define in detail how the Contractor will control the identification and marking of materials and material placement.

.4 The Contractor is responsible for reviewing and accepting all materials tests and certifications.

.5 The Contractor's procedure shall define how all welds are identified and how it will record weld history and NDT results. The Contractor shall be able to prove that welds reported as being satisfactory have indeed been tested. The Contractor's certification and traceability proposal shall be evaluated and the approved procedure will be subject to audit.

.6 The Contractor shall be responsible for maintaining Quality Control and Certification records and for the turnover to the Engineer for acceptance.

1.9 **Inspection and Testing**

.1 The Contractor shall be responsible for the inspection and testing of all material, equipment and workmanship required for the Work at its own and Subcontractors premises in accordance with the approved Quality Plan(s) and /or documented procedures.

.2 The Contractor's and Subcontractor's Quality Plan(s) and/or documented procedures shall address where applicable:

.1 Receiving Inspection and Testing.

.2 In process Inspection & Testing.

.3 Final Inspection & Testing.

.3 All Inspection and Testing Plans will be submitted to the Engineer for review and application of witness/hold points. All inspection and testing will be carried out by trained and fully certified (Canadian CSA, CGSB, etc.) personnel. Inspection and testing procedures and personnel qualifications shall be submitted to the Engineer for review prior to inspection and testing.

.4 The Engineer and/or any Government Authority or Regulatory Authority having jurisdiction over the Work shall have access to the Contractor's and Subcontractor's premises at all times for surveillance activity. The Engineer shall be at liberty to inspect the Work at any stage and to reject any part not complying with the contract. When, in the opinion of the Engineer, any part of the Work requires inspection, the Contractor shall thoroughly clean the part of all excess and waste materials and shall allow sufficient time for the part to be properly inspected.

.5 Inspections by the Engineer and/or Authorities having jurisdiction over the Work shall not absolve Contractor from its responsibility to carry out such inspections and testing as to ensure contract requirements are met.

1.10 **Quality Audits**

.1 The Contractor shall be responsible for conducting Internal Quality Audits on its Procedures and Systems. The frequency of these audits will be according to the Contractor's Quality Plan. The Engineer may conduct Quality Audits on Contractor's Procedures and Systems at designated periods, and as required.

1.11 **Quality System Deficiencies**

.1 Deficiencies in the Contractor's Quality System shall be subject to immediate corrective action by the Contractor. The Engineer reserves the right to suspend any or all of the Work when any such deficiencies become evident. Any Work carried out by the Contractor, which is outside the documented controls of the Contractor's Quality System, shall at the Engineer's sole discretion, be rejected.

1.12 **Daily Quality Control Report**

.1 The Daily Quality Control Report shall be used by the Contractor to document the summary of daily inspection activities performed by the Contractor's Quality Control Manager. It shall include any of the inspections that are performed that day, as well as all test monitoring and rework of non-conforming items. Legible copies of these reports are to be submitted to the Engineer on a weekly basis, or more frequently if deemed necessary by the Engineer.

1.13 **Non-Conformance Report**

.1 Non-Conformance Reports will be generated for work that is found to be in non-conformance with the Contract documents or the referenced quality standards:

.1 It is not the intent to routinely and repeatedly issue Non-Conformance Reports, but to issue them only after normal standard procedures have been exhausted, or if the work performed is a detriment to the project.

.2 A copy of the Non-conformance Report complete with a Proposed Corrective Action shall be forwarded to the Engineer for review and acceptance. A Proposed Corrective Action Plan that fails the review process will be returned to the Contractor's QC Manager for modification and re-submittal.

.3 Non-conformance Reports will be signed off only after the Non-Conforming item or items have been corrected to the satisfaction of the Contract.

.4 Work activities affected by a Non-Conformance Report will be deducted from the Contractor's Progress Payment until resolved to the satisfaction of the Engineer.

END OF SECTION

1. GENERAL

1.1 The Owner does not guarantee as uninterruptible the services provided to the Contractor as described in this Section and is not responsible for lost time or costs arising out of interruptions to any or all of these services.

1.2 The Contractor shall use the utilities and services within the limits of the ratings and capacities and where applicable, shall be responsible for the total maintenance and troubleshooting of the systems installed by it (the Contractor's equipment and installation is subject to inspection and approval by the Engineer at any time).

2. ELECTRICAL SERVICES

2.1 The Contractor is responsible to provide all construction power as required to perform their work. The Contractor will be responsible to obtain temporary construction power from the local utility if required. Contractor equipment must be CSA approved and in good condition.

2.2 The Contractor shall specify their power requirements during the bidding process.

3. WATER SERVICES

3.1 The Contractor is responsible to provide all water required to perform their work. The disposal method of the water, following its use, shall be the responsibility of the Contractor with the approval of the Engineer.

3.2 The Contractor shall specify their water requirements during the bidding process.

3.3 Where heated water is required for cleaning or rinsing purposes, the Contractor shall provide heaters, storage tanks, fuel, and any necessary materials. All such equipment, storage tanks and piping shall be maintained in a clean state and removed upon completion of the Work.

3.4 The Contractor shall be responsible for ensuring that during such things as flushing, testing and draining, the lines are protected from freezing and no hazardous conditions are produced.

4. COMMUNICATIONS

4.1 The Contractor shall be responsible for any telephone services through the local service provider.

END OF SECTION

1. SITE SECURITY

1.1 General security service for the Site shall be provided by the Contractor. The Contractor shall be responsible for the security of the site and the loss or tampering of material, tools and equipment and be responsible for the safety thereof.

1.2 The Contractor shall setup secured access points to the site and control any personnel or traffic onto the site. Entrance to and exit from the Site may be through the access gates which may be controlled by security guards.

2. VISITORS

2.1 The Contractor shall setup and administer a site safety orientation program for any personnel that are entering the site.

END OF SECTION

1. ICE AND SNOW REMOVAL

1.1 The Contractor shall be responsible for all ice and snow removal from its work areas on the Site.

2. WEATHER PROTECTION

2.1 The Contractor shall, at all times, provide protection against weather so as to maintain all work, materials and apparatus free from injury or damage. If the weather becomes such that the protection supplied is inadequate to maintain the conditions specified herein, the Work shall, on the approval or direction of the Engineer, be stopped until necessary protection to maintain these specified conditions is provided. Work stoppage on this account shall in no way relieve the Contractor of the responsibility for meeting the specified completion dates or entitle the Contractor to any claim for damages or extra cost. Any work damaged by failure to provide required protection shall be removed and replaced with new work as directed by the Engineer and at no cost to the Owner.

3. CLEANING

3.1 The Contractor shall at all times during the course of the Work, prevent the accumulation on the premises of debris caused by the Work. Whenever it is necessary, in the opinion of the Engineer and in all events upon completion of the Work, the Contractor shall remove from the premises all temporary buildings and facilities, debris, all Work and materials condemned by the Engineer and also its tools, scaffolding and surplus materials, and shall leave the premises in good order and condition. The Contractor shall prevent at any time, unnecessary accumulation or scattering of debris, materials, tools and equipment around the premises, and shall conduct the Work in an orderly manner. In case the Contractor fails to comply with the above provisions, or in case of dispute, the Engineer shall have the right to remove debris, tools, and equipment, and to charge the cost of such removal and/or repairs, to the Contractor, or charge prorata to the various contractors engaged on the Work, who in the opinion of the Engineer are responsible for the cleanup cost. Charges for cleanup cost to the Contractor shall be made by backcharging the Contractor.

3.2 All domestic refuse and hazardous wastes are to be disposed of by the Contractor, off the Owner's property in accordance with all applicable laws, at the Contractor's expense.

END OF SECTION

1. PARKING

1.1 A parking area for private vehicles shall be designated by the Contactor in consultation with the Engineer. The Owner shall assume no liability whatsoever for any damage or loss of any nature to the vehicles of the Contractor, the vehicles of the Contractor's employees or the vehicles of visitors to the Site.

2. TRAFFIC CONTROL

2.1 The Contractor is required to adhere to the PEI OH&S Standard for Traffic Control.

END OF SECTION

1. CONTRACTOR'S SITE OFFICES

1.1 The Contractor shall be responsible to supply mobile site offices as per their requirements. This shall include an office and meeting space for the Engineer.

2. TEMPORARY PLANT

2.1 The Contractor shall supply all temporary construction buildings in a community-style arrangement for temporary facilities for its staff trades and subcontractors. The quantity and type of buildings and arrangement shall be approved by the Engineer and they shall be erected in locations agreed to by the Engineer within the areas assigned to the Contractor. Temporary buildings shall be kept clean and free from nuisance. The Contractor shall provide its own equipment for heating and lighting its buildings, the equipment being installed in accordance with good safety practice and approved by the Engineer.

2.2 No temporary building including field office, tool room, or material storage buildings shall be permitted within any permanent structure on this project, unless such buildings, and their locations have been previously approved by the Engineer and that such temporary buildings, structures or enclosures are constructed of non-combustible materials which meet with ULC CAN4-S114.

2.3 The Contractor shall provide and maintain all equipment such as temporary stairs, ladders, ramps, scaffolds, hoists, runways, derricks, chutes, slings, special hoisting equipment, small tools, jacks, braces and all materials, articles, supplies, etc., necessary for the proper execution of the Work. All such apparatus, equipment and construction shall meet all requirements of the Labour Laws applicable thereto and shall comply with the requirements of the National Safety Council insofar as an article or articles thereof are applicable to this Work the same as if written herein in full.

3. STORAGE OF HAZARDOUS MATERIALS

3.1 Storage for hazardous materials must be isolated from the general construction area. The location and construction of these areas shall be approved by the Engineer and shall comply with all applicable fire, safety or other codes, standards or regulations. Only approved safety cans are permitted for the dispensing of flammable liquids.

4. WORKING AND STORAGE AREAS

4.1 Working areas on Site, including areas for storage, temporary works and plant shall be assigned to the Contractor at the start of the Contract.

4.2 Any necessary fencing or enclosures required by the Contractor, for working and storage areas, shall be provided by the Contractor.

4.3 The Contractor shall provide facilities for storage of all materials which are normally stored and protected from the elements. Storage shall be in an orderly manner and adequate measures taken to prevent damage to and maintain fire protection of stored materials. Replacement of damaged materials shall be at the Contractor's expense.

4.4 The Contractor shall ensure that material for which it has the responsibility of storing and incorporating into the Work is not damaged or allowed to rust or corrode or suffer other deterioration. Replacement of damaged materials shall be at the Contractor's expense.

5. KITCHEN, LUNCHROOMS AND CHANGE ROOMS

5.1 The Owner will not provide kitchen, lunchroom, washroom or change room facilities.

5.2 The Contractor shall supply adequate facilities for its personnel subject to the review and satisfaction of the Engineer.

END OF SECTION

1. GENERAL

.1 Commissioning for this project is the prime responsibility of the Contractor, who shall ensure that all Work is performed in accordance with the drawings and specifications.

.2 Within 60 days of Contract award, the Contractor shall present a detailed Commissioning Plan to the Engineer for Review and Approval. The commissioning plan shall detail the full suite of commissioning activities that will occur under the scope of the Contractor and any Sub-Contractors. It shall contain details of all the planned activities (e.g., what tests are to be performed on what equipment, when, and by whom).

.3 The Contractor will designate a Commissioning Manager who will be present at the Work Site at all times while the Contractor's commissioning work is in progress. The Commissioning Manager will be responsible for liaising with the Engineer. The Commissioning Manager will be responsible to ensure that all test results and commissioning check-outs are completed and submitted to the Engineer for approval in accordance with the project schedule.

1.2 Borden Substation

.1 The commissioning scope of work covers the electrical requirements for the Borden Substation. This includes:

.1 Commissioning of nine (9) Owner supplied 138kV SF6 gas insulated circuit breakers each including an SEL 2440 Remote I/O, a trip coil monitor, and eighteen (18) bushing current transformers.

.2 Commissioning of two (2) Owner supplied 138kV – 30 MVAR reactors each including an SEL 2414 and twelve (12) bushing current transformers.

.3 Commissioning of two (2) Owner supplied 138kV SF6 gas insulated RL circuit switchers each including an SEL 2440.

.4 Commissioning of twenty (20) Owner supplied 138kV manually operated disconnect switches.

.5 Commissioning of six (6) Owner supplied 138kV motorized disconnect switches with grounding switches each including an SEL 2440.

.6 Commissioning of two (2) Owner supplied 138kV – 120/240V, SF6 gas insulated 75kVA station services transformers each including an SEL 2411.

.7 Commissioning of three (3) 138kV direct buried single phase power cables to the existing 138kV-69kV X3 transformer in the existing adjacent substation.

.8 Commissioning of twenty (20) Owner supplied Voltage Transformers

.9 Commissioning of six (6) Owner supplied Current Transformers.

.10 Unless explicitly stated otherwise, full functional and system commissioning all of the Protection & Control circuits and equipment described on the Single-Line Diagrams and Three Line Diagrams including portions thereof which reside within the Owner-Supplied PCT Building.

.11 Commissioning of substation grounding system.

.12 Commissioning of 138kV high voltage buswork, drop leads, connectors, insulators, etc.

.13 Commissioning of the substation lighting system.

.14 Commissioning of power and control cables installed under the contract.

.15 Commissioning of the complete substation electrical system.

1.3 **Cape Tormentine Riser Station**

.1 The commissioning scope of work covers the electrical requirements for Cape Tormentine Riser Station. This includes:

.1 Commissioning of five (5) Owner supplied 138kV motorized disconnect switches (MODs) each including an SEL 2440. Four (4) of the MODs also include an associated grounding switch.

.2 Installation of one (1) Owner supplied 138kV – 120/240V, 75kVA station services transformer which includes an SEL 2411.

.3 Commissioning of the riser station's grounding system.

.4 Commissioning of power and control cables installed under the contract.

.5 Commissioning of the riser station's lighting system.

.6 Configuration and Commissioning of telecommunications and controls equipment supplied and installed under the contract as well as those within NB Power Telecommunications Cabinet 503.

.7 Commissioning of the DC station services equipment in the control building.

.8 Commissioning of the AC station services equipment in the control building.

.9 Commissioning of the control building services.

.10 Commissioning of the complete riser station electrical system.

1.4 **Work by Others**

.1 Commissioning of certain aspects of the project will be by others. The following commissioning will be completed by others:

.1 Commissioning of transmission lines Y113, Y109, and Y107 in Borden

.2 Commissioning of the Radio system in Borden

.3 Commissioning of the Sub Sea Cable health monitoring system

.4 Commissioning of the transmission line Revenue Metering system in Cape Tormentine

.5 Component commissioning of Protection & Controls cabinets in the Borden PCT building including point-to-point verification and insulation resistance testing of panel wiring and inter-panel wiring within the PCT building (up to the building side terminal strip of the marshalling cabinets). Please note that all functional and system commissioning of these panels is in the Contractor's scope of work.

1.5 **Commissioning Plan**

.1 The Commissioning Plan is a comprehensive planning document detailing all commissioning activities to be undertaken by the Contractor. It shall outline the commissioning steps and controls the Contractor intends to take to manage commissioning activities. It shall also outline how the Contractor intends to report commissioning progress and the frequency of this reporting.

.2 The Commissioning Plan shall outline each item that shall be commissioned. For each item, the Commissioning Plan shall list the tests to be performed and commissioning activities (steps) that shall be completed. As a minimum, the testing for equipment shall cover the manufacturer's recommendations.

.3 The Commissioning Plan shall provide a schedule of when commissioning activities will occur for each item to be commissioned. This schedule shall be reviewed in conjunction with the Engineer on periodic basis. When required, the plan shall be updated and resubmitted to the Engineer for approval.

1.6 **Optimization Support**

.1 Upon completion of commissioning and approved hand-over of the fully functional new Borden Substation and Cape Tormentine Riser Station to the Owner by the Contractor, the Contractor shall supply the full-time services (5 days per week, 10 hours per day) of two fully qualified commissioning personnel who have worked on the substation to the Owner for a period of four (4) weeks. The commissioning personnel's daily activities shall be directed by the Owner and shall be associated with the optimization of Substation's and Riser Station's Protection, Control, and Teleprotection systems. The contractor shall include in their price all expenses and incidentals associated with the provision of the described optimization support.

END OF SECTION

1. DELIVERY OF MATERIALS

1.1 The Contractor shall be responsible for receiving, unloading, handling and safely storing all materials and equipment assigned and/or consigned to it.

1.2 The Contractor shall be fully responsible for accepting all materials consigned to it for incorporation into the Work whenever these materials are to the Contractor's account.

1.3 In the event the Contractor is not present when deliveries of materials and/or equipment are made, the unloading charges shall be to the Contractor's account.

1.4 The Contractor shall provide with their tender submission the names and qualifications of crane operators they intend on using to off load equipment on-site. During the construction period the crane operators are subject to approval by the Engineer.

2. MATERIALS

2.1 Unless otherwise specified, all materials to be supplied by the Contractor for incorporation in the permanent works shall be new and of the best quality of their respective kinds, shall comply with the latest edition of the relevant standard of the Canadian Standards Association, and shall be subject to the approval of the Engineer.

3. CONTRACTOR'S STORAGE RESPONSIBILITIES

3.1 Materials and equipment supplied by the Owner for incorporation into the Work shall be received by the Contractor at the site directly from the Owner's suppliers and the Contractor shall be responsible for the proper care, preservation and storage of such materials and equipment, if necessary, prior to its incorporation into the Work.

3.2 The Contractor shall review the bill of ladings and ensure that all the required equipment is received with the shipment. The Contractor shall also inspect the equipment to ensure that there is no damage at the time of delivery. The original bill of ladings shall be provided to the Engineer after receipt of equipment and inspection.

END OF SECTION

1. GENERAL

1.1 Related Work

.1 All sections of the specification.

1.2 Standard

.1 The Contractor shall comply with the Environmental Protection Act and its regulations.

.2 The Contractor shall comply with the PEI Department of Transportation, Infrastructure and Energy Environmental Protection Plan.

.3 Should there be differences between this specification and/or other governing requirements the more stringent shall apply.

.4 The design, installation and maintenance of environmental controls shall be as per the PEI Department of Transportation, Infrastructure and Energy Specifications Manual and the PEI Department of Transportation, Infrastructure and Energy Environmental Protection Plan.

2. PRODUCTS

2.1 Type I Silt Fence

.1 Geotextile fabric shall be 600 mm in width and conform to the following minimum requirements:

Property	Min	ASTM
Grab Tensile Strength (N)	400	D-4632
Elongation at Break Point (%)	25 max.	D-4632
Permativity (cm/s)	0.230	D-4491
Apparent Opening Size (µm)	480	D-4751
UV Degradation (%)	70	D-4355

.2 Wooden stakes shall be 50 mm square and a minimum length of 1.5 m.

.3 Staples shall be heavy duty wire staples of 25 mm minimum length.

2.2 Mulch

.1 Mulch to be reasonable free of noxious weeds and other undesirable materials. It shall not be so wet, decayed or compacted that it inhibits even and uniform spreading.

.2 As availability permits, hay mulch is the preferred material over straw mulch.

3. EXECUTION

3.1 Schedule

.1 Installation of environmental controls shall be a first step in the construction sequence.

.2 If a project is completed before October 31, all barren soil shall be seeded and then covered with hay mulch, with areas within 30 metres (m) of watercourse or wetland also being covered with jute mat. Otherwise all barren soil shall have a heavy layer of mulch applied for over wintering and removed in the spring for soil preparation and seeding.

3.2 General

.1 Existing vegetation shall not be disturbed any more than necessary.

.2 Any damage to neighbouring properties shall be reinstated to the Owner's satisfaction.

3.3 Fires

.1 Fires and burning of rubbish on site are not permitted.

3.4 Disposal of Wastes

.1 Do not bury rubbish and waste materials on site unless approved by Engineer.

.2 Do not dispose of waste or volatile materials, such as mineral spirits, oil or paint thinner into waterways, storm or sanitary sewers.

.3 Stockpiled and excavated materials shall be contained on site. Any excess material shall be removed from the site for reuse or proper disposal.

3.5 Drainage

.1 Provide temporary drainage and pumping as necessary to keep excavations and site free from water.

.2 Do not pump water containing suspended materials into waterways, sewer or drainage systems.

.3 Control disposal or runoff of water containing suspended materials or other harmful substances in accordance with local authority requirements or as required by Engineer.

3.6 Site Clearing and Plant Protection

.1 Protect trees and plants on site and adjacent properties where indicated.

.2 Wrap in burlap, trees and shrubs adjacent to construction work, storage areas and trucking lanes, and encase with protective wood framework from grade level to height of 2 m.

.3 Protect roots of designated trees to dripline during excavation and site grading to prevent disturbance or damage. Avoid unnecessary traffic, dumping and storage of materials over root zones.

.4 Minimize stripping of topsoil and vegetation.

.5 Restrict tree removal to areas indicated or designated by Engineer.

3.7 **Work Adjacent to Waterways**

.1 Reuse or disposal of project materials shall not take place within 30 m of a watercourse or wetland without receiving permission from Provincial Fisheries, Aquaculture and Environment.

.2 Do not operate construction equipment in waterways.

.3 Do not use waterway beds for borrow material.

.4 Do not dump excavated fill, waste material or debris in waterways.

.5 Design and construct temporary crossings to minimize erosion to waterways.

.6 Do not skid logs or construction materials across waterways.

.7 Avoid indicated spawning beds when constructing temporary crossings of waterways.

.8 Do not blast under water or within 100 m of indicated spawning beds.

3.8 **Pollution Control**

.1 Maintain temporary erosion and pollution control features installed under this contract.

.2 Control emissions from equipment and plant to local authorities emission requirements.

.3 Prevent sandblasting and other extraneous materials from contaminating air beyond application area, by providing temporary enclosures.

.4 Cover or wet down dry materials and rubbish to prevent blowing dust and debris. Provide dust control for temporary roads.

3.9 **Straw Bale Check Dams**

.1 Remove rocks, roots, logs and other debris and grade as required.

.2 Place the straw bales tightly together. Drive two sturdy wooden stakes through each bale, deep enough to anchor them securely. Drive the stakes in each bale toward the previously laid bale to force the bales together.

.3 Wedge loose straw between any cracks or openings.

.4 Contractor to maintain check dams in a functional condition until the grass on seeded slopes and ditch bottom is sufficiently established to be effective deterrent to erosion. This includes inspections after each rainfall, immediate repairs to structures found not functioning properly and removal of sediment deposits.

.5 Dispose of the sediment deposits at a location at least 30 m away from a watercourse and in such a manner that the sediment will not be returned to the work area or watercourse.

.6 Remove the sediment deposits prior to the level of sedimentation reaching a point within 100 mm of the crest of the notch.

.7 The engineer may require that some or all check dams be maintained after substantial completion of the work.

.8 Remove the check dams after the site has been stabilized and level and seed the areas that are disturbed during removal.

3.10 **Type I Silt Fence**

.1 Installation:

.1 At designated locations, the Contractors will excavate a 100 mm x 100 mm trench on the up-slope side of the fence as detailed. The silt fence may be set back from the toe of slopes; area permitting and provided setbacks are maintained. This provides more sediment storage area and lowers runoff velocities.

.2 The Contractor shall drive the sturdy 50 mm square wooden stakes, spaced 2 m apart, at least 400 mm into the ground along the down-slope side of the trench. The filter fabric will be in a continuous roll cut to the length of the barrier to avoid joints. When joints are unavoidable, filter fabric will be spliced together on a support stake with a minimum 150 mm overlap.

.3 The filter fabric will be attached to the stake on the upstream side extending the bottom 200 mm into the trench as detailed using 25 mm heavy duty wire staples.

.4 The Contractor shall backfill and compact the excavated soil in the trench over the filter fabric.

.5 Prefabricated silt fence systems, at the discretion of the Engineer, may be used if they meet the above material requirements. They will be installed as per the manufacturer's instructions should they differ from the above method.

.2 Maintenance:

.1 The Contractor shall contain sediment runoff and maintain the silt fence in a functional condition as long as necessary as follows:

.1 Inspect all silt fences after each rainfall and at least daily during periods of prolonged rainfall.

.2 All silt fences or parts thereof that are damaged will be repaired immediately to the satisfaction of the Engineer.

.3 Trapped sediment will be removed when it has accumulated to a level half the height of the fence and will be disposed of at a location approved by the Engineer.

.4 The Engineer may require that some or all silt fences be maintained after substantial completion of the work.

.5 If specified by the Engineer, the Contractor shall remove the silt fence at the completion of the job and dress and seed the area to the satisfaction

of the Engineer. At the discretion of the Engineer, the Contractor shall gather silt fencing and stakes that are no longer required and place these in neat piles for collection and reuse by the Engineer.

3.11 **Mulching**

.1 The Contractor shall, prior to mulching, complete the required grading and surface roughening and remove large rocks and other debris that may prohibit uniform coverage.

.2 To avoid the mulch from being blown around, the length of hay or straw should be chopped to 200-300 mm. Mulching should be spread by the use of mechanical means such as a bale buster unless the job is small enough to be done by hand.

.3 Hay or straw mulch (unprocessed mulch) shall be spread evenly and uniformly over the designated areas at a rate of 4,500 kg per hectare (approximately 300 standard size bales or seven 1.8 m round bales) plus or minus 10%, depending on the type of ground and the slope steepness. Lumps and thick clumps of mulch shall be thinned.

.4 The hay or straw mulch shall be applied promptly on the exposed ground surface as soon as practicable after the ground has been worked and shaped to the Engineer's satisfaction.

.5 Mulch applied between June 1st and September 30th may or may not require binder at the Engineer's discretion. All mulching before June 1st and after September 30th shall require binder.

.6 Mulching 1 is defined as mulching without binder.

.7 Mulching 2 (also known as processed mulch) is defined as mulching with binder that is properly mixed in a hydro seeding unit with water. Binder shall be added at the manufacture's recommended application rate, and Mulching "2" shall be sprayed uniformly over the designated areas at a rate of 2,200 kg per hectare plus or minus 15%, depending on the type of ground and the slope steepness.

.8 Mulched areas should be inspected regularly and after rainfalls of 5 mm or more accumulation and repaired as required, until the area has stabilized.

.9 The Contractor shall maintain the mulch by repairing all damaged mulch and by re-mulching bare spots resulting from the shifting of mulch by wind, water or other means. This shall include additional mulch as required.

END OF SECTION

1. GENERAL

1.1 Work Included

.1 This section specifies requirements for reinstatement of surfaces, property, and structures damaged or disturbed by operations under this Contract. Work includes but is not limited to reinstatement of paved, gravelled and grassed surfaces, ditches and culverts.

1.2 Related Work

.1	Environmental Protection	Section 01 35 43.
.2	Site Grading	Section 32 12 10.
.3	Topsoil, Finish Grading and Seeding\Sodding	Section 32 91 00.
.4	Culverts	Section 33 41 00.

2. PRODUCTS

2.1 Materials

.1 Asphaltic materials, granular material and borrow: to the PEI Department of Transportation, Infrastructure and Energy General Provisions and Contract Specifications for Highway Construction. Topsoil, Finish Grading, and Seeding: to meet requirement of Section 32 91 00 - Topsoil, Finish Grading and Seeding.

3. EXECUTION

3.1 General

.1 Reinstate all surfaces to lines, elevations and dimensions which existed prior to construction and to match abutting surfaces.

.2 Make good all damage or disturbances to surfaces, properties and structures to a condition equal to or better than before work began, except as specified in this Section.

3.2 Gravel Surfaces

.1 Place, spread, and fine grade Class A, B or C gravel to specified compacted thickness for shoulders and other gravel surfaces. Compact to 100% Standard Proctor Density.

3.3 Grassed Surfaces

.1 Fine grade to smooth surface all areas to be reinstated with grass. Reinstate grassed surfaces to Section 32 91 00 - Topsoil, Finish Grading and Seeding.

3.4 **Ditches**

.1 Re-establish ditches to provide drainage that existed prior to construction.

.2 Remove and re-install all disturbed culverts or repair or replace all damaged culverts with new culverts of same material and to lines, elevations, and dimensions as original unless otherwise indicated.

END OF SECTION

Part 1 General

1.1 RELATED REQUIREMENTS

.1 Section 03 20 00 – Concrete Reinforcing.

.2 Section 03 30 00 – Cast-in-Place Concrete.

1.2 REFERENCES

.1 Canadian Standards Association (CSA International)

.1 CSA A23.1-14/A23.2-14, Concrete Materials and Methods of Concrete Construction/Methods of Test and Standard Practices for Concrete.

.2 CSA O86-14, Engineering Design in Wood.

.3 CSA O121-08(R2013), Douglas Fir Plywood.

.4 CSA O151-09(R2014), Canadian Softwood Plywood.

.5 CSA O153-13, Poplar Plywood.

.6 CSA O325.0-07(R2012), Construction Sheathing.

.7 CSA O437 Series-93(R2006), Standards for OSB and Waferboard.

.8 CSA S269.1-16, Falsework & Formwork.

.2 Underwriters' Laboratories of Canada (ULC)

.1 CAN/ULC-S701-11, Standard for Thermal Insulation, Polystyrene, Boards and Pipe Covering.

1.3 ACTION AND INFORMATIONAL SUBMITTALS

.1 Submittals in accordance with Section 01050 - Submittals.

.2 Submit shop drawings for formwork and falsework.

.3 Indicate method and schedule of construction, shoring, stripping and re-shoring procedures, materials, arrangement of joints, special architectural exposed finishes, ties, liners, and locations of temporary embedded parts. Comply with CSA S269.1, for falsework and formwork drawings.

.4 Indicate formwork design data: permissible rate of concrete placement, and temperature of concrete, in forms.

Part 2 Products

2.1 MATERIALS

.1 Formwork materials:

.1 For concrete without special architectural features, use wood and wood product formwork materials to CSA O121, CSA O86, CSA O437 Series, CSA O153.

.2 For concrete with special architectural features, use formwork materials to CSA A23.1/A23.2.

.3 Rigid insulation board: to CAN/ULC-S701.

.2 Tubular column forms: round, spirally wound laminated fibre forms, internally treated with release material.

.1 Spiral pattern to show in hardened concrete.

.3 Form ties:

.1 For concrete not designated 'Architectural', use removable or snap-off metal ties, fixed or adjustable length, free of devices leaving holes larger than 25 mm diameter in concrete surface.

.2 For Architectural concrete, use snap ties complete with plastic cones and light grey concrete plugs.

.4 Form release agent: non-toxic, biodegradable, low VOC.

.5 Form stripping agent: colourless mineral oil, non-toxic, biodegradable, low VOC, free of kerosene, with viscosity between 70 and 110s Saybolt Universal, 15 to 24 mm^2/s at 40 degrees C, flashpoint minimum 150 degrees C, open cup.

.6 Falsework materials: to CSA S269.1.

Part 3 Execution

3.1 FABRICATION AND ERECTION

.1 Verify lines, levels and centres before proceeding with formwork/falsework and ensure dimensions agree with drawings.

.2 Obtain Engineer’s approval for use of earth forms framing openings not indicated on drawings.

.3 Hand trim sides and bottoms and remove loose earth from earth forms before placing concrete.

.4 Fabricate and erect falsework in accordance with CSA S269.1.

.5 Refer to architectural drawings for concrete members requiring architectural exposed finishes.

.6 Do not place shores and mud sills on frozen ground.

.7 Provide site drainage to prevent washout of soil supporting mud sills and shores.

.8 Fabricate and erect formwork in accordance with CSA S269.1 to produce finished concrete conforming to shape, dimensions, locations and levels indicated within tolerances required by CSA A23.1/A23.2.

.9 Align form joints and make watertight.

.1 Keep form joints to minimum.

.10 Use 25 mm chamfer strips on external corners and/or 25 mm fillets at interior corners, joints, unless specified otherwise.

.11 Form chases, slots, openings, drips, recesses, expansion and control joints as indicated.

.12 Construct forms for architectural concrete, and place ties as indicated.

.1 Joint pattern not necessarily based on using standard size panels or maximum permissible spacing of ties.

.13 Build in anchors, sleeves, and other inserts required to accommodate Work specified in other sections.

.1 Ensure that anchors and inserts will not protrude beyond surfaces designated to receive applied finishes, including painting.

.14 Clean formwork in accordance with CSA A23.1/A23.2, before placing concrete.

3.2 REMOVAL AND RESHORING

.1 Leave formwork in place for following minimum periods of time after placing concrete.

.1 3 days for walls and sides of beams.

.2 3 days for columns and piers.

.3 7 days for beam soffits, slabs, decks and other structural members, or 3 days when replaced immediately with adequate shoring to standard specified for falsework.

.4 2 days for footings and abutments.

.2 Remove formwork when concrete has reached 50 % of its design strength or minimum period noted above, whichever comes later, and replace immediately with adequate reshoring.

.3 Provide necessary reshoring of members where early removal of forms may be required or where members may be subjected to additional loads during construction as required.

.4 Space reshoring in each principal direction at not more than 3000 mm apart.

.5 Re-use formwork and falsework subject to requirements of CSA A23.1/A23.2.

END OF SECTION

Part 1 General

1.1 RELATED REQUIREMENTS

.1 Section 03 10 00 – Concrete Forming and Accessories.

.2 Section 03 20 00 – Cast-in-Place Concrete.

1.2 REFERENCES

.1 ASTM International

.1 ASTM A82/A82M-07, Standard Specification for Steel Wire, Plain, for Concrete Reinforcement.

.2 CSA International

.1 CSA A23.1-14/A23.2-14, Concrete Materials and Methods of Concrete Construction/Test Methods and Standard Practices for Concrete.

.2 CAN/CSA A23.3-04(R2010), Design of Concrete Structures.

.3 CSA G30.18-09, Carbon Steel Bars for Concrete Reinforcement.

.4 CSA G40.20/G40.21-13, General Requirements for Rolled or Welded Structural Quality Steel/Structural Quality Steel.

.5 CAN/CSA-G164-M92 (R2003), Hot Dip Galvanizing of Irregularly Shaped Articles.

.3 Reinforcing Steel Institute of Canada (RSIC)

.1 RSIC-2004, Reinforcing Steel Manual of Standard Practice.

1.3 ACTION AND INFORMATIONAL SUBMITTALS

.1 Submit in accordance with Section 01050 - Submittals.

.2 Prepare reinforcement drawings in accordance with RSIC Manual of Standard Practice.

.3 Shop Drawings:

.1 Submit drawings stamped and signed by professional engineer registered or licensed in Province of Prince Edward Island.

.1 Indicate placing of reinforcement and:

.1 Bar bending details.

.2 Lists.

.3 Quantities of reinforcement.

.4 Sizes, spacings, locations of reinforcement and mechanical splices if approved by Engineer, with identifying code marks to permit correct placement without reference to structural drawings.

.5 Indicate sizes, spacings and locations of chairs, spacers and hangers.

.2 Detail lap lengths and bar development lengths to CAN/CSA A23.3, unless otherwise indicated.

.1 Provide type B unless otherwise indicated.

1.4 QUALITY ASSURANCE

.1 Submit in accordance with Section 01055 - Quality Control and as described in PART 2 - SOURCE QUALITY CONTROL.

.1 Mill Test Report: upon request, provide Engineer with certified copy of mill test report of reinforcing steel, minimum 4 weeks prior to beginning reinforcing work.

.2 Upon request, submit in writing to Engineer proposed source of reinforcement material to be supplied.

1.5 DELIVERY, STORAGE AND HANDLING

.1 Deliver, store and handle materials in accordance with Section 01090 – Material and Equipment and with manufacturer's written instructions.

.2 Delivery and Acceptance Requirements: deliver materials to site in original factory packaging, labelled with manufacturer's name and address.

.3 Storage and Handling Requirements:

.1 Store materials off ground, in dry location and in accordance with manufacturer's recommendations in clean, dry, well-ventilated area.

.2 Replace defective or damaged materials with new.

Part 2 Products

2.1 MATERIALS

.1 Substitute different size bars only if permitted in writing by Engineer.

.2 Reinforcing steel: billet steel, grade 400, deformed bars to CSA G30.18, unless indicated otherwise.

.3 Cold-drawn annealed steel wire ties: to ASTM A82/A82M.

.4 Chairs, bolsters, bar supports, spacers: to CSA A23.1/A23.2.

.5 Mechanical splices: subject to approval of Engineer.

.6 Plain round bars: to CSA G40.20/G40.21.

2.2 FABRICATION

.1 Fabricate reinforcing steel in accordance with CSA A23.1/A23.2 and Reinforcing Steel Manual of Standard Practice by the Reinforcing Steel Institute of Canada.

.2 Obtain Engineer's written approval for locations of reinforcement splices other than those shown on placing drawings.

.3 Ship bundles of bar reinforcement, clearly identified in accordance with bar bending details and lists.

2.3 SOURCE QUALITY CONTROL

.1 Upon request, provide Engineer with certified copy of mill test report of reinforcing steel, showing physical and chemical analysis, minimum 4 weeks prior to beginning reinforcing work.

.2 Upon request, inform Engineer of proposed source of material to be supplied.

Part 3 Execution

3.1 FIELD BENDING

.1 Do not field bend or field weld reinforcement except where indicated or authorized by Engineer.

.2 When field bending is authorized, bend without heat, applying slow and steady pressure.

.3 Replace bars which develop cracks or splits.

3.2 PLACING REINFORCEMENT

.1 Place reinforcing steel as indicated on placing drawings in accordance with CSA A23.1/A23.2.

.2 Prior to placing concrete, obtain Engineer's approval of reinforcing material and placement.

.3 Ensure cover to reinforcement is maintained during concrete pour.

3.3 CLEANING

.1 Progress Cleaning: clean in accordance with Section 010070 – Temporary Controls.

.1 Leave Work area clean at end of each day.

.2 Final Cleaning: upon completion remove surplus materials, rubbish, tools and equipment in accordance with Section 010070 – Temporary Controls.

END OF SECTION

Part 1 General

1.1 RELATED REQUIREMENTS

.1 Section 03 10 00 – Concrete Forming and Accessories.

.2 Section 03 20 00 – Concrete Reinforcing.

1.2 REFERENCES

.1 Abbreviations and Acronyms:

.1 Portland Cement: hydraulic cement, blended hydraulic cement (XXb - b denotes blended) and Portland-limestone cement.

.1 Type GU, GUb and GUL - General use cement.

.2 Type MS and MSb - Moderate sulphate-resistant cement.

.3 Type MH, MHb and MHL - Moderate heat of hydration cement.

.4 Type HE, HEb and HEL - High early-strength cement.

.5 Type LH, LHb and LHL - Low heat of hydration cement.

.6 Type HS and HSb - High sulphate-resistant cement.

.2 Fly ash:

.1 Type F - with CaO content less than 15%.

.2 Type CI - with CaO content ranging from 15 to 20%.

.3 Type CH - with CaO greater than 20%.

.3 GGBFS - Ground, granulated blast-furnace slag.

.2 Reference Standards:

.1 ASTM International

.1 ASTM C260/C260M-10a, Standard Specification for Air-Entraining Admixtures for Concrete.

.2 ASTM C309-11, Standard Specification for Liquid Membrane-Forming Compounds for Curing Concrete.

.3 ASTM C494/C494M-15a, Standard Specification for Chemical Admixtures for Concrete.

.4 ASTM C1017/C1017M-13e1, Standard Specification for Chemical Admixtures for Use in Producing Flowing Concrete.

.5 ASTM D412-15a, Standard Test Methods for Vulcanized Rubber and Thermoplastic Elastomers-Tension.

.6 ASTM D624-00(2012), Standard Test Method for Tear Strength of Conventional Vulcanized Rubber and Thermoplastic Elastomer.

.7 ASTM D1751-04(2013), Standard Specification for Preformed Expansion Joint Filler for Concrete Paving and Structural Construction (Nonextruding and Resilient Bituminous Types).

.8 ASTM D1752-04a(2013), Standard Specification for Preformed Sponge Rubber Cork and Recycled PVC Expansion Joint Fillers for Concrete Paving and Structural Construction.

.2 Canadian General Standards Board (CGSB)

.1 CAN/CGSB-51.34-M86(R1988), Vapour Barrier, Polyethylene Sheet for Use in Building Construction.

.3 CSA International

.1 CSA A23.1/A23.2-14, Concrete Materials and Methods of Concrete Construction/Methods of Test and Standard Practices for Concrete.

.2 CSA A283-06 (R2011), Qualification Code for Concrete Testing Laboratories.

.3 CSA A3000-13, Cementitious Materials Compendium (Consists of A3001, A3002, A3003, A3004 and A3005).

1.3 ADMINISTRATIVE REQUIREMENTS

.1 Pre-installation Meetings: Convene pre-installation meeting one week prior to beginning concrete works.

.1 Ensure key personnel, site supervisor, Engineer, speciality contractor - finishing, forming, concrete producer, testing laboratories attend.

.1 Verify project requirements.

1.4 ACTION AND INFORMATIONAL SUBMITTALS

.1 Provide submittals in accordance with Section 01050 – Submittals.

.2 Provide testing and inspection reports for review by Engineer and do not proceed without written approval when deviations from mix design or parameters are found.

.3 Concrete pours: provide accurate records of poured concrete items indicating date and location of pour, quality, air temperature and test samples taken as described in PART 3 - FIELD QUALITY CONTROL.

.4 Concrete hauling time: provide for review by Engineer deviations exceeding maximum allowable time of 120 minutes for concrete to be delivered to site of Work and discharged after batching.

1.5 QUALITY ASSURANCE

.1 Quality Assurance: in accordance with Section 01055 - Quality Control.

.2 Provide Engineer minimum 4 weeks prior to starting concrete work, with valid and recognized certificate from plant delivering concrete.

.1 Provide test data and certification by qualified independent inspection and testing laboratory that materials and mix designs used in concrete mixture will meet specified requirements.

.3 Minimum 4 weeks prior to starting concrete work, provide proposed quality control procedures for review by Engineer on following items:

.1 Falsework erection.

.2 Hot weather concrete.

.3 Cold weather concrete.

.4 Curing.

.5 Finishes.

.6 Formwork removal.

.7 Joints.

.4 Quality Control Plan: provide written report to Engineer verifying compliance that concrete in place meets performance requirements of concrete as established in PART 2 - PRODUCTS.

1.6 DELIVERY, STORAGE AND HANDLING

.1 Delivery and Acceptance Requirements:

.1 Concrete hauling time: deliver to site of Work and discharged within 120 minutes maximum after batching.

.1 Do not modify maximum time limit without receipt of prior written agreement from Engineer and concrete producer as described in CSA A23.1/A23.2.

.2 Deviations to be submitted for review by Engineer.

.2 Concrete delivery: ensure continuous concrete delivery from plant meets CSA A23.1/A23.2.

Part 2 Products

2.1 DESIGN CRITERIA

.1 Alternative 1 - Performance : to CSA A23.1/A23.2, and as described in MIXES of PART 2 - PRODUCTS.

2.2 PERFORMANCE CRITERIA

.1 Quality Control Plan: ensure concrete supplier meets performance criteria of concrete as established by Engineer and provide verification of compliance as described in PART 1 - QUALITY ASSURANCE.

2.3 MATERIALS

.1 Portland Cement: to CSA A3001, Type GU.

.2 Supplementary cementing materials: with minimum 20% fly ash replacement, by mass of total cementitious materials to CSA A3001.

.3 Water: to CSA A23.1.

.4 Aggregates: to CSA A23.1/A23.2.

.5 Admixtures:

.1 Air entraining admixture: to ASTM C260.

.2 Chemical admixture: to ASTM C494 or ASTM C1017. Engineer to approve accelerating or set retarding admixtures during cold and hot weather placing.

.6 Shrinkage compensating grout: premixed compound consisting of non-metallic aggregate, Portland cement, water reducing and plasticizing agents to CSA A23.1/A23.2.

.1 Compressive strength: 50 MPa at 28 days.

.7 Curing compound: to CSA A23.1/A23.2 white.

.8 Premoulded joint fillers:

.1 Bituminous impregnated fiber board: to ASTM D1751.

.2 Sponge rubber: to ASTM D1752, Type I, flexible grade.

.9 Dampproof membrane:

.1 Kraft/polyethylene membrane:

.1 Plain: .75 mm thick polyethylene film bonded to asphalt treated creped kraft.

.10 Polyethylene film: 0.38 mm thickness to CAN/CGSB-51.34.

2.4 MIXES

.1 Alternative 1 - Performance Method for specifying concrete: to meet Engineer performance criteria to CSA A23.1/A23.2.

.1 Ensure concrete supplier meets performance criteria as established below and provide verification of compliance as in Quality Control Plan.

.2 Provide concrete mix to meet following plastic state requirements:

.1 Workability: free of surface blemishes, loss of mortar, colour variations, segregation.

.3 Provide concrete mix to meet following hard state requirements:

.1 Durability and class of exposure: C-1 and S-3.

.2 Compressive strength at 28 age: 35 MPa minimum.

.3 Aggregate size 20 mm maximum.

.4 Provide quality management plan to ensure verification of concrete quality to specified performance.

.5 Concrete supplier's certification: both batch plant and materials meet CSA A23.1 requirements.

Part 3 Execution

3.1 PREPARATION

.1 Obtain Engineer's written approval before placing concrete.

.1 Provide 24 hours minimum notice prior to placing of concrete.

.2 Place concrete reinforcing in accordance with Section 03 20 00 - Concrete Reinforcing.

.3 During concreting operations:

.1 Development of cold joints not allowed.

.2 Ensure concrete delivery and handling facilitates placing with minimum of re-handling, and without damage to existing structure or Work.

.4 Pumping of concrete is permitted only after approval of equipment and mix.

.5 Ensure reinforcement and inserts are not disturbed during concrete placement.

.6 Prior to placing of concrete obtain Engineer's approval of proposed method for protection of concrete during placing and curing in adverse weather.

.7 Protect previous Work from staining.

.8 Clean and remove stains prior to application for concrete finishes.

.9 Maintain accurate records of poured concrete items to indicate date, location of pour, quality, air temperature and test samples taken.

.10 Do not place load upon new concrete until authorized by Engineer.

3.2 INSTALLATION/APPLICATION

.1 Do cast-in-place concrete work to CSA A23.1/A23.2.

.2 Sleeves and inserts:

.1 Do not permit penetrations, sleeves, ducts, pipes or other openings to pass through joists, beams, column capitals or columns, except where indicated or approved by Engineer.

.2 Where approved by Engineer, set sleeves, ties, pipe hangers and other inserts and openings as indicated or specified elsewhere.

.3 Sleeves and openings greater than 100 x 100 mm not indicated, must be reviewed by Engineer.

.4 Do not eliminate or displace reinforcement to accommodate hardware. If inserts cannot be located as specified, obtain written approval of modifications from Engineer before placing of concrete.

.5 Confirm locations and sizes of sleeves and openings shown on drawings.

.6 Set special inserts for strength testing as indicated and as required by non-destructive method of testing concrete.

.3 Anchor bolts:

.1 Set anchor bolts to templates in co-ordination with appropriate trade prior to placing concrete.

.2 Grout anchor bolts in preformed holes or holes drilled after concrete has set only after receipt of written approval from Engineer.

.1 Drilled holes: to manufacturers' recommendations.

.3 Protect anchor bolt holes from water accumulations, snow and ice build-ups.

.4 Set bolts and fill holes with epoxy grout.

.4 Grout under base plates and machinery using procedures in accordance with manufacturer's recommendations which result in 100 % contact over grouted area.

.5 Finishing and curing:

.1 Finish concrete to CSA A23.1/A23.2.

.2 Use procedures as reviewed by Engineer or those noted in CSA A23.1/A23.2 to remove excess bleed water. Ensure surface is not damaged.

.3 Use curing compounds compatible with applied finish on concrete surfaces. Provide written declaration that compounds used are compatible.

.4 Finish concrete floor to CSA A23.1/A23.2. Class B.

.5 Provide swirl-trowelled finish unless otherwise indicated.

.6 Rub exposed sharp edges of concrete with carborundum to produce 3 mm minimum radius edges unless otherwise indicated.

.6 Joint fillers:

.1 Furnish filler for each joint in single piece for depth and width required for joint, unless otherwise authorized by Engineer.

.2 When more than one piece is required for joint, fasten abutting ends and hold securely to shape by stapling or other positive fastening.

.3 Locate and form isolation, construction and expansion joints as indicated.

.4 Install joint filler.

.5 Use 12 mm thick joint filler to separate slabs-on-grade from vertical surfaces and extend joint filler from bottom of slab to within 12 mm of finished slab surface unless indicated otherwise.

.7 Dampproof membrane:

.1 Install dampproof membrane under concrete slabs-on-grade inside building.

.2 Lap dampproof membrane minimum 150 mm at joints and seal.

.3 Seal punctures in dampproof membrane before placing concrete.

.4 Use patching material at least 150 mm larger than puncture and seal.

3.3 SURFACE TOLERANCE

.1 Concrete tolerance to CSA A23.1 FF = 25 : FL = 20.

3.4 FIELD QUALITY CONTROL

.1 Site tests: conduct tests as follows in accordance with Section 01055 - Quality Control and submit report as described in PART 1 - ACTION AND INFORMATIONAL SUBMITTALS.

.1 Concrete pours.

.2 Slump.

.3 Air content.

.4 Compressive strength at 7 and 28 days.

.5 Air and concrete temperature.

.2 Inspection and testing of concrete and concrete materials will be carried out by testing laboratory approved by Engineer for review to CSA A23.1/A23.2.

.1 Ensure testing laboratory is certified to CSA A283.

.3 Ensure test results are distributed for discussion at pre-pouring concrete meeting between testing laboratory and Engineer.

.4 Contractor will pay for costs of tests as specified in Section 01055 – Quality Control.

.5 Contractor to take additional test cylinders during cold weather concreting. Cure cylinders on job site under same conditions as concrete which they represent.

.6 Inspection or testing by Consultant will not augment or replace Contractor quality control nor relieve Contractor of his contractual responsibility.

3.5 CLEANING

.1 Clean in accordance with Section 010070 – Temporary Controls.

.1 Divert unused concrete materials from landfill to local quarry after receipt of written approval from Engineer.

.2 Provide appropriate area on job site where concrete trucks can be safely washed.

.3 Divert unused admixtures and additive materials (pigments, fibres) from landfill to official hazardous material collections site as approved by Engineer.

.4 Do not dispose of unused admixtures and additive materials into sewer systems, into lakes, streams, onto ground or in other location where it will pose health or environmental hazard.

.5 Prevent admixtures and additive materials from entering drinking water supplies or streams.

.6 Using appropriate safety precautions, collect liquid or solidify liquid with inert, noncombustible material and remove for disposal.

.7 Dispose of waste in accordance with applicable local, Provincial/Territorial and National regulations.

END OF SECTION

Part 1 General

1.1 REFERENCES

.1 ASTM International Inc.

.1 ASTM A123/A123M-15, Standard Specification for Zinc (Hot-Dip Galvanized) Coatings on Iron and Steel Products.

.2 ASTM A153/A153M-15, Standard Specification for Zinc Coating (Hot-Dip) on Iron and Steel Hardware.

.3 ASTM A325-14, Standard Specification for Structural Bolts, Steel, Heat Treated, 120/105 ksi Minimum Tensile Strength.

.4 ASTM A325M-14, Standard Specification for Structural Bolts, Steel, Heat Treated 830 MPa Minimum Tensile Strength (Metric).

.2 Canadian Institute of Steel Construction (CISC).

.1 Handbook of the Canadian Institute of Steel Construction.

.3 Canadian Standards Association (CSA International)

.1 CSA G40.20/G40.21-13, General Requirements for Rolled or Welded Structural Quality Steel/Structural Quality Steel.

.2 CSA S16-09, Design of Steel Structures.

.3 CSA W47.1-09 (R2014), Certification of Companies for Fusion Welding of Steel.

.4 CSA W55.3-08 (R2013), Resistance Welding Qualification Code for Fabricators of Structural Members Used in Buildings.

.5 CSA W59-13, Welded Steel Construction (Metal Arc Welding).

1.2 ACTION AND INFORMATIONAL SUBMITTALS

.1 Provide submittals in accordance with Section 01050 - Submittals.

.2 Shop Drawings:

.1 Provide drawings stamped and signed by professional engineer registered or licensed in Province of Prince Edward Island and New Brunswick, Canada.

.3 Erection drawings:

.1 Submit erection drawings indicating details and information necessary for assembly and erection purposes including:

.1 Description of methods.

.2 Sequence of erection.

.3 Type of equipment used in erection.

.4 Temporary bracings.

.4 Fabrication drawings:

.1 Submit fabrication drawings showing designed assemblies, components and connections are stamped and signed by qualified professional engineer licensed in the Province of Prince Edward Island and New Brunswick, Canada.

.5 Fabricator Reports:

.1 Provide structural steel fabricator's affidavit stating that materials and products used in fabrication conform to applicable material and products standards specified and indicated.

1.3 DELIVERY, STORAGE AND HANDLING

.1 Deliver, store and handle materials in accordance with Section 01090 – Material and Equipment.

.2 Deliver materials in manufacturer's original, undamaged containers with identification labels intact.

Part 2 Products

2.1 DESIGN REQUIREMENTS

.1 Design details and connections in accordance with requirements of CSA S16 to resist forces, moments, shears and allow for movements indicated.

.2 Shear connections:

.1 Select framed beam shear connections from an industry accepted publication such as "Handbook of the Canadian Institute of Steel Construction" when connection for shear only (standard connection) is required.

.2 Select or design connections to support reaction from maximum uniformly distributed load that can be safely supported by beam in bending, provided no point loads act on beam, when shears are not indicated.

.3 Submit sketches and design calculations stamped and signed by qualified professional engineer licensed in Province of Prince Edward Island and New Brunswick, Canada for non standard connections.

2.2 MATERIALS

.1 W, S and WT shapes: to CSA G40.21 Grade 350W or ASTM A992.

.2 Plates, rods, angles and channel shapes: to CSA G40.21 Grade 300W.

.3 Hollow structural sections: to CSA G40.21 Grade 350W, Class C or ASTM A500, Grade C.

.4 Bolts, nuts and washers: to ASTM A325, hot-hip galvanized to ASTM A153.

.5 All structural steel and miscellaneous metals shall be hot-dip galvanized in accordance with ASTM A123.

.6 Welding electrodes: to E49XX.

2.3 FABRICATION

.1 Fabricate structural steel in accordance with CSA S16 and in accordance with approved shop drawings.

.2 Continuously seal members by continuous welds, grind smooth.

Part 3 Execution

3.1 APPLICATION

.1 Manufacturer's Instructions: comply with manufacturer's written recommendations, including product technical bulletins, handling, storage and installation instructions, and datasheets.

3.2 GENERAL

.1 Structural steel work: in accordance with CSA S16.

.2 Welding: in accordance with CSA W59.

.3 Companies to be certified under Division 1 or 2 of CSA W47.1 for fusion welding of steel structures and/or CSA W55.3 for resistance welding of structural components.

3.3 CONNECTION TO EXISTING WORK

.1 Verify dimensions and condition of existing work, report discrepancies and potential problem areas to Engineer for direction before commencing fabrication.

3.4 MARKING

.1 Mark materials in accordance with CSA G40.20/G40.21. Do not use die stamping. When steel is to be left in unpainted condition, place marking at locations not visible from exterior after erection.

.2 Match marking: shop mark bearing assemblies and splices for fit and match.

3.5 ERECTION

.1 Erect structural steel, as indicated and in accordance with CSA S16 and in accordance with approved erection drawings.

.2 Field cutting or altering structural members: to approval of Engineer.

.3 Clean with mechanical brush and touch up shop primer to bolts, rivets, welds and burned or scratched surfaces at completion of erection.

.4 Continuously seal members by continuous welds where indicated. Grind smooth.

3.6 FIELD QUALITY CONTROL

.1 Inspection and testing of materials and workmanship will be carried out by testing laboratory designated by Contractor.

.2 Provide safe access and working areas for testing on site, as required by testing agency and as authorized by Engineer.

.3 Submit test reports to Engineer within 1 week of completion of inspection.

.4 Contractor will pay costs of tests as specified in Section 010055 – Quality Control.

3.7 CLEANING

.1 Clean in accordance with Section 010070 – Temporary Controls.

END OF SECTION

Part 1 General

1.1 SCOPE OF WORK

.1 Borden Substation:

.1 Substation Construction:

.1 This Scope of work covers the electrical requirements for the construction, equipment installation and commissioning of a 138kV substation in Borden-Carleton, PE. See section 010005 for detailed scope of work.

.2 The Protection, Control and Telecommunications (PCT) building at the Borden Substation will be supplied and installed by others. The contractors scope of work will include all wiring between the PCT building and the devices in the substation yard.

.3 The Electrical Requirements includes the supply and installation of high voltage buswork, insulators, yard lighting, cables, cable trenches, ground system, and drop leads as indicated on the drawings and as specified herein.

.4 The Electrical requirements also include the installation, connection, assembly, and commissioning of Owner supplied equipment including:

.1 Nine (9) 138kV – SF6 gas insulated circuit breakers.

.2 Twenty (20) 138kV manually operated disconnect switches.

.3 Six (6) motorized disconnect switches with grounding switch.

.4 Two (2) 138kV – 30MVAr reactors.

.5 Two (2) 138kV Circuit Switchers.

.6 Two (2) sets of 3 – 138kV Current Transformers (CTs).

.7 Twenty (20) 138kV Potential Transformers (PTs).

.8 Two (2) 138kV-120/240V, 75kVA Station Service Transformers.

.2 Connection to Existing Substation

.1 The scope of work at the Borden substation also includes connection to the existing Substation at the Borden Generating Station. This scope of work is to include but is not limited to:

.1 Installation of three (3) 138kV single phase power cables to be direct buried to the existing Borden Substation for connection to existing 138kV substation as specified in section 260040.

.2 The installation of cable riser structures in the existing 138kV substation.

.3 The installation of a secondary oil containment system on the existing "X3" transformer as specified in section 313529.

.2 The work to be performed in the existing substation is to be performed while the substation is energized. Contractor is to be aware of all safety requirements for working in an energized substation.

.2 Cape Tormentine Substation:

.1 Substation Construction:

.1 This Scope of work covers the general electrical requirements for the construction, equipment installation and commissioning of a 138kV substation in Cape Tormentine, NB. See section 010005 for detailed scope of work.

.2 The Electrical Requirements includes the supply and installation of high voltage buswork, insulators, lighting, ground system and drop leads as indicated on the drawings and specified herein. The scope of work also includes supply and installation of one Substation control building as indicated on the drawings and as specified herein.

.3 The Electrical requirements also include the installation and assembly of Owner supplied equipment including:

.1 Four (4) 138kV Motor operated disconnect switches with ground switch.

.2 One (1) 138kV Motor operated disconnect switch without ground switch.

.3 One (1) 138kV-120/240V, 75kVA Station Service Transformer.

Part 2 Codes and Standards

2.1 The complete installation shall be done in accordance to the Codes or Standards listed below. Wherever codes and standards are referred to by name or number it shall be understood that the latest edition of the code or standard shall be used.

2.2 STANDARDS

.1 The Work shall conform to the drawings listed in Appendix 1 of this document and the following.

.2 Canadian Standards Association (CSA):

.1 CSA C22.1-15, Canadian Electrical Code, Part I.

.2 CAN3-C235-83 (R2000), Preferred Voltage Levels for AC Systems, 0 to 50,000V.

.3 CSA C22.2 No. 197M1983 (R1999), PVC Insulating Tape.

.4 CAN3-G40.21, Structural Quality Steels.

.5 CSA Z85, Abbreviations for Scientific and Engineering Terms.

.6 CAN/CSA C22.2 No. 4-M89 (R2000), Enclosed Switches.

.7 C22.2 No. 5-02, Moulded-Case Circuit Breakers, Moulded case Switches and Circuit Breaker Enclosures.

.8 CAN/CSA C22.2 No 144-M91 (R2001), Ground Fault Circuit Interrupters.

.9 CSA C22.2 No. 41-M1987 (R1999), Grounding and Bonding Equipment.

.10 CSA C22.2 No. 0.4-M1982 (R1999), Bonding and Grounding of Electrical Equipment (Protective Grounding).

.11 CSA C22.2 No. 1, Radio, Television and Electronic Apparatus.

.12 CSA C22.2 No. 14-95 (R2001), Industrial Control Equipment.

.13 CSA C22.2 No. 29-M1989 (R2000), Panelboards and Enclosed Panelboards.

.14 CSA C22.2 No. 38-95(R1999), Thermoset Insulated Wires and Cables.

.15 CSA C22.2 No. 75-M1983 (R1999), Thermoplastic Insulated Wires and Cables.

.16 CAN/CSA C22.2 No. 131-M89 (R1999), Type TECK 90 Cable.

.17 CSA C22.2 No. 51-95 (R1999), Armoured Cables.

.18 CSA C22.2 No. 239-97 (R2001), Control and Instrumentation Cables.

.19 CSA C22.2 No. 214-02, Communications Cables.

.20 CSA C22.2 No. 208-M1986 (R1999), Fire Alarm and Signal Cable.

.21 CSA C22.2 No. 0.3-01, Test Methods for Electrical Wires and Cables.

.22 CSA C22.2 No. 242-92 (R2001), Standard Test Procedures and Requirements for High-Voltage Alternating-Current Cable Terminations (Adopted IEEE 48-1990).

.23 CSA C22.2 No. 232-M1988 (R1999), Optical Fibre Cables.

.24 CSA C22.2 No. 65-93 (R1999), Wire Connectors.

.25 CAN/CSA C22.2 No. 126-M91 (R2002), Cable Tray Systems.

.26 CAN/CSA C22.2 No. 126.1-98, Metal Cable Tray Systems.

.3 Electrical and Electronics Manufacturers Association of Canada (EEMAC):

.1 EEMAC 1Y-2, Bushing Stud Connectors and Aluminum Adapters (1200 Ampere Maximum Rating).

.2 EEMAC F5-1, Cable Trough Systems and Accessories.

.4 Insulated Cables Engineers Association (ICEA):

.1 S-68-516, Ethylene Propylene – rubber insulated wire.

.2 S-66-524, Cross Linked Thermosetting Polyethylene Insulated Wire.

.5 Institute of Electrical and Electronics Engineers (IEEE):

.1 IEEE STD. 80, Guide for Safety in Substation Grounding.

Part 3 Execution

.1 Coordinate Work with the Work of all other trades to avoid conflict. No extra financial compensation will be provided for relocation of work that is conflicting with other trades.

.2 Voltage Ratings:

.1 Operating voltages: to CAN3-C235-83(R2000).

.2 Lighting, electric heating, control and distribution devices and equipment to operate satisfactorily at 60 Hz within normal operating limits established by above standard. Equipment to operate in extreme operating conditions established in above standard without damage to equipment.

.3 Materials and Equipment:

.1 Provide materials and equipment in accordance with the Specifications.

.2 Equipment and material to be CSA certified. Where there is no alternative to supplying equipment which is not CSA certified, obtain special approval from a qualified inspection agency.

.4 Finishes:

.1 Clean and touch up surfaces of shop-painted equipment scratched or marred during shipment or installation, to match original paint.

.2 Clean and prime exposed non-galvanized hangers, racks and fastenings to prevent rusting.

.5 Identification of Cables and Conductors:

.1 The Contractor shall supply and install numbered identification tags on both ends of each and every cable installed. Cable tags shall be installed in a manner for easy access and identification. Identification numbers shall be as shown on the cable schedules. Refer to Section 260065.

.2 Maintain phase sequence and colour coding throughout.

.6 Wiring Terminations:

.1 Lugs, terminals and screws used for termination of wiring shall be suitable for copper conductors.

.7 Manufacturers and CSA Labels:

.1 Visible and legible after equipment is installed.

END OF SECTION

Part 1 General

1.1 DESCRIPTION

.1 Work Included

.1 The Work covered by this Section shall comprise the installation required to complete the ground grid and grounding of all electrical system components.

.2 The scope of work shall include the supply of all labour, materials and equipment to complete the following:

.1 Complete substation ground grid as indicated on drawings E-1301, E-1311, E-5301, E-5302, and E-5303.

.2 Ground connections to the footing of all structural steel members.

.3 Ground connections to all electrical equipment.

.4 Ground wires installed in all cable trenches.

.5 Ground connections to structural steel embedded in the concrete foundations for the substation control buildings.

.2 Related Work

.1 Electrical General Requirements 260005

Part 2 Products

2.1 MATERIALS

.1 Buried Conductors inside fence: buried conductors within the fence perimeter shall be bare, stranded untinned soft annealed copper wire, size #4/0 AWG.

.2 Above Ground Conductors: All exposed grounding conductors shall be CU-Bond theft deterrent composite cable, Erico part number CC5A20CB or approved equal.

.3 Buried conductors outside fence: All buried grounding conductors outside of the fence perimeter shall be CU-Bond theft deterrent composite cable, Erico part number CC5A20CB or approved equal.

.4 Connections: All conductor to conductor, conductor to fence post, and conductor to structural steel grounding plates shall be bolted connections as indicated on the drawings.

2.2 MANUFACTURERS

.1 All grounding connections: Burndy or approved equal, part numbers as listed on Drawing E-5301.

Part 3 Execution

3.1 GENERAL

.1 Terminate ground conductors in accordance with the requirements of the drawings.

.2 Install connectors in accordance with the manufacturer's recommendations.

.3 The subsea cables installation will occur after the ground grid installation. The Contractor will complete the ground grid installation over the subsea cable trenches after cable installation.

.4 Buried ground conductors are to be installed at a depth of 0.5m, in compacted earth. The ground conductors are not to be installed in crushed rock.

.5 Where ground conductors are installed below the cable trough, the ground conductor will be installed at a depth greater than 5m to ensure the ground conductor is not installed in the crushed rock.

.6 Where Ground conductors are installed below the reactor, they must be installed at a depth greater than 0.5m to allow for the reactor oil containment system.

.7 Protect exposed grounding conductors from mechanical damage by proper placement.

.8 The Contractor shall ensure that all mating surfaces that are to be welded are dry and cleaned to bright metal per the manufacturer’s instructions.

.9 Approval of the Engineer shall be obtained before covering the grounding conductors and components.

.10 All work shall conform to CSA C22.1, Canadian Electrical Code, Part 1.

END OF SECTION

Part 1 General

1.1 DESCRIPTION

.1 Work Included:

.1 The Work covered by this Section shall include the supply and installation of all lightning protection equipment as required.

.2 Related Work:

.1	Electrical General Requirements	260005
.2	Grounding	260010

Part 2 Products

2.1 Overhead Ground Wire

.1 Galvanized Steel 3/8” diameter stranded bare cable.

2.2 Lightning Protection Air Terminals, Aluminum, 609.6mm

.1 Erico LPA245ST or equivalent.

2.3 Lightning Protection Air Terminal bases suitable for chosen Air terminals with tension clamp suitable for 4/0 copper conductor

.1 Erico LPA30558H or equivalent.

Part 3 Execution

3.1 INSTALLATION

.1 Install lightning protection air terminals and overhead shield wires as indicated on the drawings, the lightning air terminal base plates are to be bolted to the top of the lightning protection structures and transmission line structures on pre-installed mounting plates.

.2 Secure 4/0 bare copper grounding conductor to lightning protection base plates using the tension clamp provided with base plate.

.3 Overhead 3/8” galvanized steel shield wires to be connected to 4/0 bare copper ground conductor using tin plated Burndy GC2929TN clamps or approved equivalent.

END OF SECTION

Part 1 General

1.1 WORK INCLUDED

.1 The Work covered by this Section shall comprise the installation required to complete the substation lighting system as per the drawings.

.2 The scope of work shall include supply all labour, materials, and equipment necessary to complete this work, which shall include but not be limited to the following:

- .1 Lighting fixtures
- .2 Mounting hardware
- .3 Conduit, wiring, cable and outlet boxes.
- .4 All miscellaneous structural components, boxes and fittings necessary to mount and connect the fixtures in the designated locations.

1.2 RELATED WORK

.1	Electrical General Requirements	260005
.2	Low Voltage Power Cables	260045
.3	Cable Trench and Conduits	260030
.4	Cable and Wire Identification	260065

Part 2 Products

2.1 LUMINAIRES

.1 LED Flood Type Fixture

- .1 Output: 29,000 Lumens
- .2 Drive Current: 1050mA Driver
- .3 Input Watts: 354W
- .4 Color Temperature: 5000k
- .5 Voltage: Auto-sensing 120 through 277
- .6 Beam Pattern: 4X4 prismatic glass
- .7 Mounting: Stainless steel 3G rated yoke
- .8 UL Listing: UL 1598A Marine Outside Type(Salt Water)
- .9 Finish: Gray Superdurable with epoxy primer
- .10 Control: DLL Photocontrol 120V

.2 Additional accessories: Full Black Visor to control light trespass, galvanized steel horizontal protractor yoke mount.

.3 Acceptable manufacturer: Holophane Predator Large LED PPLED95K10AAS445LGP-PCL1-FV-GP or approved equal.

.4 LED Area Type Fixture

.1 Output: 12,000 Lumens

.2 Wattage: 129W

.3 Color Temperature: 5000k

.4 Voltage: 120V

.5 Beam Pattern: Type 5 low angle polycarbonate

.6 Mounting: Universal

.7 UL Listing: UL 1598 listed for use in wet locations

.8 Finish: Corrosion resistant gray

.9 Control: Button style photocontrol

.5 Additional accessories: Single luminaire arm for one universal mount unit.

.6 Acceptable manufacturer: Holophane Petrolux LED PLED212L5K12UNNACRGP5BP or approved equal.

Part 3 Execution

3.1 MATERIALS

.1 All materials supplied for the lighting system shall be the types specified on Drawings, except where substitutions are specifically approved by the Engineer.

.2 All materials and/or components shall be new, and conform to the requirements of the applicable codes and standards governing materials of the type covered by this Specification.

.3 Unless otherwise specified, junction boxes shall be a minimum size of 100mm and not less than 38mm deep, hot dipped galvanized sheet steel, with metal cover.

3.2 INSTALLATION

.1 Refer to the electrical drawings for general mounting arrangements of lighting fixtures.

.2 The Contractor shall install fixtures in the locations shown on the drawings and at the noted elevations using structural steel mounting provisions. Before commencing with the lighting installation in any area, the Contractor shall examine the area for any obstructions which may interfere with the fixture installation. Significant conflicts in locations shall be referred to the Engineer for a decision. Fixture relocations within 10'-0" shall be at no extra cost.

.3 Contractor shall ensure LED Flood Type fixture type orientation are correct with drawing locations and the lighting distribution patterns are properly oriented.

.4 Lighting fixture mounting details indicate the general mounting arrangements to be followed but are not intended to be all encompassing. The Contractor shall be responsible for any miscellaneous structural components and fittings as necessary to mount the fixtures in the designated locations.

.5 The Contractor shall be responsible for coordinating his work with that of other Contractors on the site so that permanent lighting installations are not installed where they will be damaged by subsequent operations.

.6 The Contractor will repair any damage to the finish of structural steel which has resulted from his operations.

.7 All fixtures shall be completely wired in accordance with the latest requirements of the CEC with minimum No. 14 AWG fixture wire.

.8 Upon completion of installation, Contractor shall adjust fixture orientation and shield placement at night in order to ensure proper light distribution and minimize light trespass beyond the fence line.

END OF SECTION

Part 1 General

1.1 DECRIPTION

.1 Work Included:

.1 The Work covered by this Section shall include the supply and installation of all cable trenching system and conduits including associated equipment such as hangers, supports, couplings, fitting, etc. as indicated on the drawings and described herein.

.2 The drawings do not indicate all conduit runs. Those conduit runs indicated are in diagrammatic form only.

1.2 RELATED WORK

.1	Electrical General Requirements	260005
.2	Grounding	260010
.3	Low Voltage Power Cables	260045
.4	Earthwork and Site Grading	310010

Part 2 Products

2.1 MATERIALS

.1 Trenches (troughs):

.1 All troughs shall be pre-cast, high density Polymer Concrete suitable for heavy traffic.

.2 Cable trough shall have no interior permanent exposed steel components to support the cable trough sidewalls or cable trough covers. Cable trough must be able to support vehicular sidewall pressures and loads during initial installation and during the entire construction period without additional interior permanent exposed steel components.

.3 The cable trough system shall include all necessary fittings and covers as specified on the drawings.

.4 The cable trough shall be provided with integral dividers as indicated on the drawings. The dividers shall be used to separate the AC cables from the DC cables within each trough.

.5 Dividers shall be designed to support lateral loads from cables without any structural warping or deflections. Installation hardware shall be stainless steel, round head bolts countersunk to prevent and damage to cable jacketing.

.6 The weight of each cover shall not exceed the allowable handling weight as per OSHA requirements.

.7 The cable trough including the Polymer Concrete covers shall be rated to support a load of 40,000 lb without failure, H20 loading.

.8 Plastibeton or equivalent.

.2 Conduits:

.1 All Conduits shall be rigid PVC.

.3 Conduit Fittings:

.1 Fittings shall be manufactured for use with the conduit specified. The fittings shall be such that they will maintain the integrity of the enclosure or conduit that they are used with.

.2 Factory "ells" where 90° bends are required for 1" and larger conduits.

.4 Fish Cord:

.1 Polypropylene.

Part 3 Execution

3.1 INSTALLATION

.1 Contractor shall provide:

.1 All required labor, supervision, materials, supplies, and equipment.

.2 Installation, including excavation, concrete work, and backfilling.

.3 All schedules, drawings, procedures, test reports, and other information and documents used during installation.

.4 All required inspections and testing.

.2 Two (2) separate cable trench systems shall be installed for “A” and “B” systems. The “A” and “B” trenches shall be completely isolated from each other and shall not cross or combine at any point. Dividers shall be installed inside the troughs to provide separation for AC, DC and fibre cables.

.3 AC and DC wiring are to be run in separate conduits, for each piece of equipment with “A” and “B” systems with AC and DC circuits there will be four (4) conduits; “AC-A”, “DC-A”, “AC-B”, and “DC-B”. The “A” conduits will run to the “A” trough and the “B” conduits will run to the “B” trough.

.4 4/0 bare copper grounding conductor shall be installed throughout the full length of all trenches. Pigtails installed through the trough openings and connected to the grounding grid are to be provided every 20m.

.5 Conduit sleeves through which conduits are to pass shall be sealed with a fire rated caulking compound after the conduits are in place.

.6 All cable shall be installed in PVC conduit where they exit the trench system to the end device.

.7 Before installation, the interior of all conduits, conduit bends, fittings, and underground ducts shall be inspected by Contractor and cleaned of all dirt, cuttings, and other foreign material. Cut ends of conduit shall be reamed to remove burrs and sharp edges.

.8 Exposed Conduit:

.1 Conduit shall be installed to conform to the surfaces over which it is run. Conduit directions shall be horizontal, vertical, and parallel to structural column lines or foundations, avoiding diagonal runs.

.2 Where exposed conduits are dimensioned on Drawings they shall be installed to a tolerance of ½-inch.

.9 Spacing of conduit supports shall not exceed 3 metres.

.10 Conduits supports shall be fastened to concrete with expansion bolts.

.11 Conduit connections, where relative movement may occur, shall be made with flexible conduit.

.12 Install pull boxes on conduit runs exceeding 30 metres, size boxes to requirements of the CEC.

.13 There shall be a maximum of three 90° bends or the equivalent thereof in one conduit run. Pull boxes or pull sleeves shall be used to stay within these requirements. On long conduit runs, pull boxes, or pull sleeves shall be installed in every 100 feet of conduit run. Pull boxes or pull sleeves shall be sized so that the bending radius is greater than specified by the cable manufacturer for the type and size of cable being pulled.

.14 Pull boxes, pull sleeves, and junction boxes shall all be located so as to be accessible.

.15 Unless otherwise indicated on Drawings, all conduit joints shall be threaded, using standard couplings. Joints shall be made up tight. Running threads and slip joints other than approved fittings shall not be used. Conduit runs which cannot be complete with standard joints shall be made up with threaded type conduit unions of Buyer-approved split type couplings.

.16 Open ends of conduit shall be capped during construction work by caps or other approved means. Flush plugs shall be used with conduits that terminate flush with the floor.

.17 All conduits shall be installed in such manner as to avoid entrapment of moisture. Where this is impossible and where required, Contractor shall drill weep-hole in the bottom of the conduit at the lowest point in the run. Drilling shall be accomplished before the installation of cables, and all drilling burrs removed.

.18 Conduits shall be identified by two aluminum strips, ½” wide with conduit numbers embossed and securely affixed, one near each end.

.19 The Contractor shall be responsible for the excavation of trenches and the installation of all cable trough and conduits as specified on the drawings and herein.

.20 The trench shall allow for the installation of crushed stone under and on the sides of the trough as indicated on the drawings, in accordance with the manufacturer's recommendations and as approved by the Engineer.

END OF SECTION

Part 1 General

1.1 DESCRIPTION

.1 Work Included:

.1 The Work covered under this Section includes but is not limited to the supply, handling and installation of all 138kV Buswork, lightning arresters and insulators as detailed on the drawings provided.

.2 Related Work:

.1 Section 260005 - Electrical General Requirements.

.2 Section 260010 – Grounding.

Part 2 Products

2.1 PRODUCTS SUPPLIED BY CONTRACTOR

.1 The Contractor shall supply and install all materials and equipment necessary to complete this section of work, which shall include but not be limited to all items not listed as FREE ISSUED TO CONTRACTOR on the Bus Work Materials List 133546898M501

2.2 GENERAL REQUIREMENTS

.1 Quality Assurance and Testing

.2 All cables and buswork shall be manufactured in accordance with the applicable standards referenced herein and the manufacturer's standard commercial practices as a minimum. All equipment selected by the Contractor must be approved by the Engineer.

.3 Receiving, Storage and Handling

.4 The Contractor shall unpack, clean, and check all aluminum bus immediately upon receipt. The Contractor shall remove all materials which might damage the bus finish and shall store the bus in such a manner that the finish will be protected. All costs associated with the cleaning of minor black marks, abrasions, and scratches shall be included in the lump sum price. The Contractor shall be responsible for maintaining the finish on bus accepted from the carrier. Defective bus finish discovered after initial unpacking and inspection shall be the responsibility of the Contractor. Any stored or erected bus found to have unsatisfactory finish shall be refinished or replaced by the Contractor at the option of the Owner. All expense for such refinishing or replacement shall be borne by the Contractor. All bus shall be carefully handled and erected to provide a complete bus system without dents, abrasions,

.5 Discolorations, or other structural or surface damage. Any bus so damaged shall be replaced at the Contractors expense.

Part 3 Execution

3.1 INSTALLATION

.1 The Contractor shall be responsible for the supply, location and installation of all connectors and fittings required for connection of bare Aluminum conductors to Buswork as specified on drawings.

3.2 TERMINATION

.1 Individual conductors shall be straightened and aligned such that no pressure will be exerted on the terminals when the conductors are mated with terminal pads.

END OF SECTION

Part 1 General

1.1 DESCRIPTION

.1 Work Included:

.1 The Work covered under this Section includes but is not limited to the receiving, handling, installation, field testing and commissioning of Owner supplied 138kV Cables as detailed on the drawings provided.

.2 Related Work:

.1 Section 260005 - Electrical General Requirements.

.2 Section 260010 – Grounding.

Part 2 Products

2.1 PRODUCTS SUPPLIED BY OWNER

.1 Four (4) sections of 138kV cable, three to be installed and one spare.

2.2 PRODUCTS SUPPLIED BY CONTRACTOR

.1 The Contractor shall supply all labour, tools, materials and equipment necessary to complete this section of work, which shall include but not be limited to all items not listed as FREE ISSUED TO CONTRACTOR on the Bus Work Materials List 133546898M501 and all cables listed on the cable schedule.

Part 3 Execution

3.1 INSTALLATION

.1 The Contractor shall be responsible for the trenching and laying of cables in the trench between the new substation and the existing substation as indicated on the drawings.

.2 One trench will be installed directly to the cable risers in the existing substation, one trench will be installed to bring conduits to the existing 138kV circuit breaker, one trench will be installed to bring conduits to the existing 138kV transformer in the substation, and one trench will be installed to connect to an existing conduit which is stubbed up at the existing radio tower.

.3 The trench depth and cable spacing shown on the drawings must be maintained throughout the entire length of the trench to maintain cable ampacity.

.4 A 50mm thick concrete barrier shall be provided in the trench above the cables and conduits throughout the entire portion of the trench which is outside of the fenced in areas as indicated on the drawings.

.5 A foil backed, detectable warning tape shall be buried throughout the entire length of the trench.

.6 The existing 138kV substation is to remain energized throughout the installation, contractor to follow all necessary safety precautions for working in a substation.

.7 Conduit and trench routing shown on drawings are approximate, contractor to verify trenching and conduit routes and obtain the approval of the Engineer prior to installation.

3.2 WORK DONE BY OTHERS

.1 Termination of cables on termination structures will be done by others.

END OF SECTION

Part 1 General

1.1 DESCRIPTION

.1 The Work covered under this Section includes but is not limited to:

.1 The supply, handling, installation and termination (at both ends) of all cables listed on the cable schedule.

.2 The supply, handling, installation, and termination of 0-1000V wire and miscellaneous cable for building services as detailed on the drawings provided.

.2 Related Work:

.1 Section 260005 - Electrical General Requirements.

.2 Section 260010 – Grounding.

.3 Section 260030 - Cable Trench and Conduits.

.4 Section 260050 – Control Cables

Part 2 Products

2.1 PRODUCTS SUPPLIED BY CONTRACTOR

.1 The Contractor shall supply and install all materials and equipment necessary to complete this section of work, which shall include but not be limited to the following:

.1 All cables as identified on the cable schedule

.2 Cable identification tags

.3 P-type clamps (magnetic and non-magnetic)

.4 Ty-wraps

.5 Cable lugs where required

.6 Split bolt connectors

.7 Conduit

.8 Liquid tight and teck connectors

.9 Electric sealing compound and tape

.10 Epoxy splice kits

.11 Cable mounting hardware

2.2 PRODUCT DESCRIPTIONS

.1 Cable Supports, Electrical Tape and Splice Kits:

.1 Wrap-around cable supports shall be as manufactured by Raychem type CSS.

.2 Electric tape shall be 3M Scotch 88 series or equivalent.

.3 Epoxy splice kits shall be Scotch cast 82 series or equivalent.

.2 Power Wire and Cables

.1 All AC and DC power cables to be FT-4 rated TECK-90, having interlocking aluminum armour, copper shielding and PVC jacketing.

.2 Conductors: stranded for 10 AWG and larger. Minimum size: 12 AWG.

.3 Copper conductors: size as indicated, with insulation of chemically cross-linked thermosetting polyethylene material rated RW90.

.4 All power wire up to and including No. 12 AWG shall be rated 600V. All power wire larger than No. 12 AWG shall be rated 1000 V minimum

.3 CT Cable

.1 4 Conductor No. 8 AWG, 1000V AC rated.

.2 Copper conductors complete with overall longitudinal copper shield and #14 AWG drain wire.

.3 PVC insulation and white PVC jacket, FT4 rated.

.4 Conductor colour coding:

.1 Red (A)

.2 Black (B)

.3 Blue (C)

.4 White (N)

.4 PT Cable

.1 4 Conductor No. 12 AWG, 600V AC rated.

.2 Copper conductors complete with overall longitudinal copper shield and #14 AWG drain wire.

.3 PVC insulation and white PVC jacket, FT4 rated.

.4 Conductor colour coding:

.1 Red (A)

.2 Black (B)

.3 Blue (C)

.4 White (N)

2.3 GENERAL REQUIREMENTS

.1 Quality Assurance and Testing

.1 All cables and wire shall be manufactured in accordance with the applicable standards referenced herein and the manufacturer's standard commercial practices as a minimum. All wire and cable selected by the Contractor must be approved by the Engineer.

Part 3 Execution

3.1 GENERAL

.1 Contractor shall be

.2 During installation of the cables, care shall be exercised to avoid kinking or bending which may damage the cable insulation or sheath.

.3 Cables which are accidentally damaged during installation shall be reported immediately to the Engineer for further instructions.

.4 All cables shall be provided with cable bushings at the termination cabinets with the provision of shield grounding at both ends (unless otherwise instructed).

.5 Unless otherwise specified cable splices shall not be permitted. Cable shields, where used, shall be mechanically and electrically continuous throughout, and shall be electrically secured to boxes and equipment enclosures as specified.

.6 The minimum bending radii of cables during pulling and permanent training shall not be less than those recommended by the cable manufacturer.

.7 The tension applied to cables during pulling and permanent training shall not exceed that recommended by the cable manufacturer.

.8 Before pulling cables, sleeves, conduits, trenches and ducts shall be thoroughly inspected and cleaned. Abrasive or sharp edges which might cause damage to cable sheaths or jackets during the pulling operations shall be removed.

.9 Care should be taken to protect the manufacture's cable markings located near the termination ends of the cables during installation so that they remain clearly visible.

.10 Special care shall be exercised during welding operations by the Contractor and others to prevent damage to cables. Cables shall be protected by fire preventive blankets provided by the Contractor.

.11 The Contractor shall be responsible for the supply, location and installation of all sleeves and openings required for passage of cables and conduits through concrete foundations. Install cable sleeves prior to pouring of concrete. Sleeves through concrete: rigid PVC sized for free passage of cable and protruding minimum 2 inches or as specified on drawings. If plastic or composite material sleeves are used in fire rated walls or floors, remove before cable installation. All openings shall be sealed around sleeves to the satisfaction of the Engineer.

.12 Cable route selection is as follows:

.1 Cables designated on "A" systems shall be installed in the "A" Trench and Conduit System.

.2 AC and DC cables for the "A" system shall be run in separate conduits to the cable trough.

.3 Cables designated on "B" systems shall be installed in the "B" Trench and Conduit System.

.4 AC and DC cables for the “B” system shall be run in separate conduits to the cable trough.

.13 Install off-tray cable within PCT building parallel or perpendicular to building lines. Install so as to conserve headroom in exposed locations and cause minimum interference in spaces through which they pass.

.14 Group off-tray cables wherever possible on suspended or surface channels.

.15 Use beam clamps to secure cables to exposed steel work, sized to suit cable diameter.

.16 Use channel type supports and clamps for surface or suspended cables. Max. spacing 36”.

.17 Use minimum ¼” dia. Galvanized threaded rods to support suspended channels.

.18 Do not pass cables through structural members except as indicated.

.19 Cables concealed in concrete shall be installed in conduit.

.20 Do not install cable raceways in masonry walls.

.21 Do not install cable raceways in terazzo or concrete toppings with less than 2” cover.

3.2 INSTALLATION OF CABLES IN CONDUIT

.1 Single conductor AC cables shall not be installed in magnetic conduits nor penetrate magnetic material in single-phase configurations.

.2 All single conductor cables forming three-phase circuits shall be installed in the same raceway or metallic conduit.

3.3 TERMINATION OF CABLES

.1 Teck cable or conduit shall be used for all equipment entry. Teck cables shall be secured by means of teck connectors. The conduit shall be secured by means of liquid-tight connectors installed on the equipment's gland plate. Holes shall be punched or drilled and tapped where required in panels or enclosures to accommodate the connectors.

.2 All cables shall be stripped back to point of entry and cleared of filler, tape and cable jacket.

.3 Cables shall be supported at termination points independently of the terminal connections to prevent injurious strain on the equipment terminals.

.4 Individual conductors shall be straightened and aligned such that no pressure will be exerted on the terminals when the conductors are mated with terminal pads.

.5 Stranded control and signal wires terminating under a screw terminal wire clamp shall be terminated with a locking fork connector, while those terminating under a stud type shall require a ring-type connector.

3.4 BUILDING SERVICES CABLE AND WIRE

.1 Branch wiring for lighting, receptacles and miscellaneous loads shall be TECK-90, interlocked aluminum armour, FT-4 rated c/w overall PVC jacket. The Contractor shall select cable routings which minimize cable length and voltage drop while remaining parallel or perpendicular to building lines.

.2 Install telecommunications and fire alarm system cabling in galvanized rigid steel conduit.

3.5 CABLE SIZES

.1 Sizes of cables for transformer and panel feeders shall be as shown on the drawings. Cable sizes for branch circuit wiring shall be in accordance with the Canadian Electrical Code with No. 12 AWG being the minimum size. Cables shall be sized so that the voltage drop in any branch circuit from the distribution panelboard to the furthest device will not exceed 3% for all circuits. The circuit load to be used when determining voltage drops shall be 80% of the feeder circuit breaker rating. All voltage drop calculations shall be submitted to the Engineer for approval before installing branch circuit cables.

END OF SECTION

Part 1 General

1.1 DESCRIPTION

.1 Work Included:

.1 The work covered under this Section shall include all labour, materials, tools and equipment required for testing, certification and identification of the installed telecommunications cabling as called for in these specifications and related drawings.

.2 This section includes minimum requirements and installation methods for the following:

.1 Copper Cable Testing and Testers.

.2 Labels and Labelling.

.2 Related Work:

.1 Section 260055 - Fibre Optic Cable.

.2 Section 260065 - Cable and Wire Identification.

1.2 CODES AND STANDARDS

.1 All testing procedures and testers shall comply with applicable requirements of:

.1 ANSI/TIA/EIA-568-B.1, Commercial Building Telecommunications Cabling Standard – Part 1: General requirements, including applicable addendum.

.2 ANSI/TIA/EIA-568-B.2, Commercial Building Telecommunications Cabling Standard – Part 2: Balanced Twisted-Pair Cabling Components, including applicable addendum.

.2 Identification and administration work shall comply with applicable requirements of:

.1 ANSI/TIA/EIA-568-B.1, Commercial Building Telecommunications Cabling Standard – Part 1: General requirements, including applicable addendum.

.2 ANSI/TIA/EIA-568-B.2, Commercial Building Telecommunications Cabling Standard – Part 2: Balanced Twisted-Pair Cabling Components, including applicable addendum.

.3 ANSI/TIA/EIA-568-A, Commercial Building Standard for Telecommunications Pathways and Spaces.

1.3 SUBMITTALS

.1 Test reports (including fibre pre-test sheets).

Part 2 Products

2.1 COPPER CABLE TESTERS

.1 Test equipment and field test instruments shall meet requirements for ANSI/TIA/EIA-568-B.2 Annex B and Annex I.

.2 Physical interface shall be modular RJ-45 connector and a serial port with DB-9 connector.

.3 Store test results including date stamp of tests for each tested link.

.4 Print test results in report form when connected to a PC.

.5 Have auto-testing to determine if cable meets requirements of ANSI/TIA/EIA-568-B.2 Annex B and Annex I, 10 Base-T, Fast Ethernet, Gigabit Ethernet and ATM Standards.

.6 Measure NEXT for all pair combinations and attenuation on all pairs from 1.0 to 350 MHz.

.7 Tester: Fluke CertiFiber or approved equal. The Contractor shall turn over the tester to the Owner at the completion of the contract.

2.2 CABLE MARKING

.1 Labels for cable marking: vinyl substrate with a white printing area and a clear "tail" that self laminates the printed area when wrapped around the cable. If cable jacket is white, provide cable label with printing area that is any other colour than white, preferably orange or yellow so that the labels are easily distinguishable.

.2 Pre-printed labels shall meet legibility, defacement, exposure and adhesion requirements of UL 969.

.3 Hand written labels are not allowed.

Part 3 Execution

3.1 COPPER CABLE TESTING

.1 Perform the following Permanent Link tests for 100% of installed copper horizontal cabling as described in ANSI/TIA/EIA-568-B.1, Section 11.2 and ANSI/TIA/EIA-568-B.2, Annex E:

.1 Wire Map.

.2 Length.

.3 Insertion Loss.

.4 Pair-to-Pair NEXT Loss.

.5 Propagation Delay.

.6 Delay Skew.

.2 Perform the following Permanent Link tests for 100% of installed Category E horizontal copper cabling as described in ANSI/TIA/EIA-568-B.1, Section 11.2 and ANSI/TIA/EIA-568-B.2, Annex E:

.1 PSNEXT Loss.

.2 Pair-to pair ELFEXT.

.3 PSLEFEXT.

.4 Return Loss.

.3 Cross-connects from horizontal to backbone cabling will not be in place for these tests.

.4 The wire map test shall verify pair to pin termination at each end and check for connectivity errors. The wire map shall indicate the following for each of the eight conductors:

.1 Continuity to the remote end.

.2 Shorts between any two or more conductors.

.3 Reversed pairs.

.4 Split pairs.

.5 Transposed pairs.

.6 Any other miswiring.

.5 The maximum length of the permanent link for horizontal cable shall be 90 meters. Shorten any cable runs as required at no additional cost to Owner.

.6 Replace and or repair cable and terminations as necessary to assure 100% passing performance specifications.

.7 Final testing shall be scheduled and conducted in the presence of the Engineer.

.8 Submit test results reports for each copper cabling permanent link to Owner before project is closed.

3.2 HORIZONTAL CABLE IDENTIFICATION AND LABELLING

.1 Neatly and permanently label all copper and fibre optic cables with the cable number at both ends.

END OF SECTION

Part 1 General

1.1 DESCRIPTION

.1 Work Included

.1 The Work covered under this Section shall include the supply, delivery and installation of all fibre optic communications cables required.

.2 General Requirements

.1 The general requirements for this work are;

.1 Supply and installation of fibre optic cable for connection between field equipment control panels and PCT building Fibre Switches.

.2 All fibre cable runs between equipment shall be armoured, loose tube type.

.3 All cables designated for “A” Systems shall be installed in the “A” cable trenching and Conduit systems.

.4 All cables designated for “B” systems shall be installed in the “B” cable trenching and conduit system.

.5 Supply and installation of connectors

.6 Labelling of cables

.7 Testing of cables

.2 568SC optical fibre patch cords shall be of a crossover orientation such that Position A goes into Position B on one fibre and vice versa on the other fibre. Each end of the 568SC optical fibre patch cord shall be identified to indicate Position A or Position B, if the connector can be separated into simplex components.

.3 When the interface is other than a duplex connector, the connector that plugs into the receiver shall be considered Position A and the connector that plugs into the transmitter shall be considered Position B. The optical fibre patch cord shall be assembled in a crossover orientation such that Position A goes into position B on one fibre and Position B to Position A on the other end of the fibre pair.

.3 Related Work

.1 Section 260005 - Electrical General

.2 Section 260030 - Cable Trench and Conduit

.3 Section 260050 - Control Cables

.4 Section 260065 - Cable and Wire Identification

.4 Work By Others

.1 Installation of switches and communications equipment in PCT Building.

1.2 CODES AND STANDARDS

.1 ANSI/ICEA S-83-596, Fiber Optic Premises Distribution Cable

.2 ANSI/ICEA S-87-640, Fiber Optic Outside Plant Communications Cable

.3 ANSI/TIA/EIA-568-A (CSA T529-95), Commercial Building Telecommunications Standard

.4 ANSI/TIA/EIA-569-A (CSA T530), Commercial Building Standards for Telecommunications Pathways and Spaces

.5 ANSI/TIA/EIA-598-A, Optical Fibre Cabling Colour Coding.

.6 ANSI/TIA/EIA-568-B.3, Optical Fibre Cabling Components Standard, including applicable addendum.

.7 ANSI/TIA/EIA-568-B.3, Optical Fibre Cabling Components Standard, including applicable addendum.

.8 EIA/TIA-455 Series, Fibre Optic Test Procedures.

.9 TIA/EIA-526 Series, Optic Fibre Systems Test Procedures.

Part 2 Products

2.1 PRODUCTS SUPPLIED BY CONTRACTOR

.1 The Contractor shall supply all other materials and equipment not supplied by the Owner but necessary to complete this section of Work, which shall include but not be limited to the following:

.1 Identification tags per Section 260065

.2 Ty-wraps

.3 Conduit

.4 All cabling as indicated on the Cable schedule

.2 Product Descriptions

.1 Armoured Fibre Optic Cable Specifications

.1 Use of Cable: Fast Ethernet

.2 Termination connectors: ST to ST (Blue UPC)

.3 Cable type: Multi-mode, multiple fibre

.4 No of fibres: As indicated

.5 Core/cladding material: 62.5/125 µm

.6 Central Member: Glass or equivalent

.7 Filled Buffer Tube: Comprised of filled buffer tubes containing multiple fibres, colour coded per ANSI/TIA/EIA-568-B.

.8 Inner Jackets: Water-swellable tape, dielectric strength members, ripcord and covered with flame retardant outer jacket.

.9 Interlocking Armour: Aluminum

.10 Outer Jacket: Halogen Free, Flame Retardant (FT-4), Low Toxicity, Colour Orange (Indoor Low U.V. Applications), Colour Black (Exterior High U.V. Applications)

.11 Attenuation @ 850 nm: Length (m) x 0.0035db/m + 2db max.

.12 Attenuation @ 1300 nm: Length (m) x 0.0015db/m + 2db max.

.13 Minimum Bandwidth: 160 MHz-km @ 850 nm, 500 MHz-km @ 1300 nm

.14 Acceptable Manufacturer: Corning FREEDM Loose Tube Cables (Cat # 006 KSX-14130AA1 (Orange) and 066 KSF-T4130AA1 (Black) – for a 6-fibre cable or approved equal

.3 Field Installable Fibre Optic Connectors:

.1 Type: Multimode Connector with composite ferrile and housing.

.2 Termination Type: Mechanical splice

.3 Intermateability: ST compatible and SC connections.

.4 Compliance: ANSI/TIA/TEA 568-B.3

.5 Insertion Loss: < 0.3 dB

.6 Durability: <0.2 dB change, 500 cycles

.7 Nominal Fibre OD: 125 µm

.8 Acceptable Manufacturer: Corning Type SC connector, Part No. 95-000-40 or approved equal.

.4 Patch Cords (SC to ST):

.1 Type: SC to ST multimode duplex patch cords, 62.4/125/µm – 1 meter

.2 Acceptable Manufacturer: Siemon, Part No. FJ2-SCST-MM-01 or approved equal.

.5 Spider Fanout Kits

.1 Type: Spider Fanout Kits for the termination of the loose tube multimode fibre tubes. These kits are to match the type of cable being supplied.

.2 Acceptable Manufacturer: Corning, Part No. FAN-BT25-06 (2-6 fibres) or approved equal.

.6 Accessories

.1 Cable Cleaner: 45 Towellettes. Acceptable Manufacturer: Corning, Part No. FC-45-1 or approved equal.

2.2 GENERAL REQUIREMENTS

.1 Quality Assurance and Testing

.1 All fibre optic cables, terminations, patch panels and associated hardware shall be manufactured in accordance with the applicable standards referenced herein and the manufacturer's standard commercial practices as a minimum. All fibre optic cable wire, termination, patch panels and associated hardware selected by the Contractor must be approved by the Engineer.

Part 3 Execution

3.1 FIBRE OPTIC CABLE INSTALLATION

.1 Follow manufacturer's instructions for the handling, installation, termination and testing for all fibre optic cable installations.

.2 During installation of the cables, care shall be exercised to avoid kinking or bending which may damage the cable insulation or sheath. Due care must be taken in handling fibre optic cables as they are especially sensitive to damage from handling and bending.

.3 Armoured fibre optic cables shall be installed for all cable runs.

.4 Cables which are accidentally damaged during installation shall be reported immediately to the Engineer for further instructions.

.5 The minimum bending radii of cables during pulling and permanent training shall not be less than those recommended by the cable manufacturer.

.6 Before pulling cables, cable trays, sleeves, conduits and ducts shall be thoroughly inspected and cleaned. Abrasive or sharp edges which might cause damage to cable sheaths or jackets during the pulling operations shall be removed.

.7 Special care shall be exercised during welding operations by the Contractor and others to prevent damage to cables. Cables shall be protected by fire preventive blankets provided by the Contractor.

.8 This Contractor shall be responsible for the supply, location, and installation of all sleeves and openings required for passage of cables and conduits through concrete floors and walls.

.9 The Contractor shall install all cables as indicated on the drawings and/or cable routing sheets.

3.2 INSTALLATION OF CABLES IN CABLE TRAY

.1 All cables in the cable tray shall be installed straight and parallel to the edge of the straight sections of the cable tray and follow contours of cable tray fittings. Cable crossings in the tray system and at terminal points shall not be permitted, except at cable tray fittings such as tees and crosses and these shall be kept to minimum.

.2 Cable straps shall not be tightened severely because excessive pressure can damage the optical fibres.

.3 Care shall be taken to prevent clamps or ties cutting into the cable jackets. Where necessary, vinyl tape shall be used under the clamp for this purpose.

.4 The cables shall be run loose in horizontal trays but bundled and fastened to vertical runs at intervals not exceeding 4 feet.

3.3 TERMINATION OF CABLES

.1 All cables shall be terminated with type ST connectors as identified in Part 2.

.2 Armoured cables shall be prepared per the manufacturer's instructions.

.3 TECK connectors shall not be used with armoured fibre optic cable. Follow manufacturer's recommendations for entering armoured cables into cabinets and boxes.

.4 Cables shall be terminated with breakout kits designed for this application.

.5 The cable shall be secured by means of approved connectors installed on the equipment's gland plate. Holes shall be punched or drilled and tapped where required in panels or enclosures to accommodate the connectors.

.6 The Contractor shall supply and install additional uni-strut racks and or supports, as required, for top and bottom entry armoured cables to maintain permanent training of cables so as not to exceed the minimum bending radii of the cable.

.7 All cables shall be stripped back to point of entry and cleared of filler, tape and cable jacket.

.8 Optical fibre field breakout kits shall be installed for each tube of a loose-tube cable.

.9 Cables shall be supported at termination points independently of the terminal connections to prevent injurious strain on the equipment terminals.

3.4 TESTING OF SYSTEM

.1 Field test instruments for multimode fibre cabling shall meet the requirements of ANI/TIA/EIAA-526-14-A.

.2 Test all fibre optic cable strands for continuity and performance before and after the cables are pulled and terminated.

.3 Test link attenuation of all installed multimode fibre optic strands after splicing and termination in accordance with ANSI/TIA/EIA-568-B.1, Section 11.3.

.1 One direction with an optical light source and an optical power meter.

.2 Two wavelengths (850 nm and 1300 nm) to account for attenuation differences due to wavelength.

.3 One wavelength, 1300 nm for multimode strands.

.4 Multimode fibre connector losses < 0.5 dB at 850 nm.

.5 Multimode fibre splices losses < 0.3 dB at 850 nm.

.6 Localized attenuation shall not exceed 0.5 dB at any point.

.4 Fibres that are broken or damaged shall be replaced at no cost to Owner and replaced fibre optic cables shall be re-tested.

.5 Final testing shall be scheduled and conducted in the presence of the Engineer.

.6 Submit test results reports for each fibre optic cable strand to Owner before project is closed.

.7 Multimode Light Source:

.1 Meet the launch requirements of ANSI/EIA/TIA-455-50B achieved within the field test equipment or by use of an external mandrel wrap (as described in Clause 11 of ANSI/TIA/EIA-568-B.1) with a Category 1 light source.

.2 Provide stabilized 850 nm and 1300 nm ± 20 nm wavelength LED light source.

.3 Spectral width of sources shall be ☐ 50 nm of 850 nm nm for 1300 nm wavelengths.

.4 Output of light source shall be 8 mW for 62.5 µm core optical fibre.

.5 Output stability ± 0.40 dB from 0 to 50 degrees C.

.6 Long term output stability ± 0.10 dB at 25 degrees C.

.7 Connector types shall include: ST.

.8 Optical Power Meter:

.1 Calibrated against national standard.

.2 Provide 850 nm, and 1300 nm ± 20 nm selectable wavelength test capability.

.3 Measurement range from 10 to –60 dBm.

.4 Accuracy ± 5% at 0 to 50 dBm.

.5 Accuracy ± -10% at 10 to 0 dBm and –50 to 60 dBm.

.6 Resolution 0.04 dB.

.7 Connector types shall include: ST.

.9 Tester:

.10 Fluke Model DSP-4300 Digital Cable Analyzer or approved equal. The Contractor shall turn over the tester at the completion of the contract.

END OF SECTION

Part 1 General

1.1 DESCRIPTION

.1 Work Included:

.1 The Work under this Section shall include the supply, handling, storage and installation of cable and conductor identification system.

.2 The drawings may not show all splitter, junction and pull boxes.

.2 Related Work:

.1 Section 26 00 05 - Electrical General Requirements.

.2 Section 26 00 45 – Low Voltage Power Cables.

.3 Section 26 00 50 – Control Cables.

.4 Section 26 00 55 – Fiber Optic Cables.

.5 Section 26 00 60 - Cat5E Cable.

1.2 CODES AND STANDARDS

.1 CSA C22.1 Canadian Electrical Code – Part 1.

Part 2 PRODUCTS

2.1 EQUIPMENT

.1 Cable tags shall be Thomas & Betts Partex PK/PK2 multi-character sleeves, colour yellow, with 3 mm high black type written text installed on Partex PKH carriers. Carriers shall be affixed to cable with UV resistant outdoor rated Partex PKB series cable ties.

.2 Panel cable tags shall be Thomas & Betts Partex punched PK multi-character sleeves, colour yellow, with 3 mm high black type written text.

.3 Wire markers shall be Thomas & Betts Partex PAZ multi-character slip on wire marker, colour yellow, with black type written text minimum 1.5 mm high or approved equal.

Part 3 EXECUTION

3.1 INSTALLATION

.1 Cable tags shall be affixed to both ends of cables at the point where they enter equipment. Each cable tag shall be affixed to the cable with two UV resistant outdoor type Thomas & Betts Partex PKB series cable ties. Cable tags shall bear the complete cable number.

.2 Panel cable tags shall be affixed to cables on the interior of electrical panels where multiple cables enter equipment. Cable tags shall be affixed to the cable with UV

resistant Thomas & Betts Partex PKB series cable ties. Cable tags shall bear the complete cable number.

.3 Wire markers shall be affixed to all wires at each terminal point and shall bear the complete wire number.

END OF SECTION

Part 1 General

1.1 DESCRIPTION

.1 Work Included:

.1 The Work covered under this Section includes but is not limited to the receiving, offloading, handling, installation, field testing and commissioning of nine (9) Owner supplied 138kV, Gas Insulated Circuit Breakers as detailed on the drawings provided.

.2 The installation contractor shall be trained by MEPPI and contain certification for the installation, operation and maintenance of MEPPI SF6 circuit breakers.

.2 Related Work:

.1 Section 26 00 05 - Electrical General Requirements.

.2 Section 26 00 10 – Grounding.

.3 Section 26 00 30 – Trenching.

.4 Section 26 00 35 – High Voltage Buswork & Insulators.

.5 Section 26 00 45 – Low Voltage Power Cables.

.6 Section 26 00 50 – Control Cables.

.7 Section 26 00 55 – Fiber Optic Cables.

.8 Section 26 00 65 – Cable & Wire Identification

Part 2 Products

.1 Products Supplied by Owner:

.1 138kV, 3000A, SF6 Gas Insulated Circuit Breakers.

.2 MEPPI 120SFMT40E-1.

.2 Products Supplied By Contractor:

.1 The Contractor shall supply all labour, tools, accessories, materials and equipment necessary to complete this section of work, which shall include but not be limited to all items not listed as FREE ISSUED TO CONTRACTOR on the Bus Work Materials List 133546898M501 and all cables listed on the cable schedule.

2.2 GENERAL REQUIREMENTS

.1 Quality Assurance and Testing:

.1 All cables and terminations shall be manufactured in accordance with the applicable standards referenced herein and the manufacturer's standard

commercial practices as a minimum. All equipment selected by the Contractor must be approved by the Engineer.

Part 3 Execution

3.1 INSTALLATION

.1 The Contractor shall be responsible for the supply, location and installation of all connectors and fittings required for connection of the Circuit Breakers to the High Voltage Busses as specified on drawings. All connections to the Circuit Breaker bushings are to be made per manufacturers recommendations.

.2 The Contractor shall be responsible for the supply, location and installation of all low voltage, control and fibre optic cables required for connection of the Circuit Breakers to the PCT Building as specified on drawings.

.3 The Contractor shall be responsible for the placement of the Circuit Breakers in the locations as shown on the drawings and installation of anchor bolts (if necessary) for each circuit breaker on its foundation as per manufacturers recommendations.

.4 The Contractor shall be responsible for filling the Circuit Breakers with SF6 gas (supplied with Circuit Breaker) as per manufacturers instructions.

END OF SECTION

Part 1 General

1.1 DESCRIPTION

.1 Work Included:

.1 The Work covered under this Section includes but is not limited to the receiving, handling, installation, field testing and commissioning of two (2) owner supplied 138kV, Gas Insulated Circuit Switchers as detailed on the drawings provided.

.2 The installation contractor shall have experience with the installation of Southern States circuit switchers.

.2 Related Work:

.1 Section 26 00 05 - Electrical General Requirements.

.2 Section 26 00 10 - Grounding.

.3 Section 26 00 30 – Trenching.

.4 Section 26 00 35 – High Voltage Buswork & Insulators.

.5 Section 26 00 45 – Low Voltage Power Cables.

.6 Section 26 00 50 - Control Cables.

.7 Section 26 00 55 – Fiber Optic Cables.

.8 Section 26 00 65 – Cable & Wire Identification.

Part 2 Products

2.1 PRODUCTS SUPPLIED BY OWNER

.1 138kV, 630A, Circuit Switchers.

.2 Southern States RL Switcher

2.2 PRODUCTS SUPPLIED BY CONTRACTOR

.1 The Contractor shall supply all labour, tools, accessories, materials and equipment necessary to complete this section of work, which shall include but not be limited to all items not listed as FREE ISSUED TO CONTRACTOR on the Bus Work Materials List 133546898M501 and all cables listed on the cable schedule.

2.3 GENERAL REQUIREMENTS

.1 Quality Assurance and Testing:

.1 All cables and terminations shall be manufactured in accordance with the applicable standards referenced herein and the manufacturer's standard commercial practices as a minimum. All equipment selected by the Contractor must be approved by the Engineer.

Part 3 Execution

3.1 INSTALLATION

.1 The Contractor shall be responsible for the supply, location and installation of all connectors and fittings required for connection of the Circuit Switchers to the High Voltage Busses as specified on drawings. All connections to the Circuit Switcher bushings are to be made per manufacturers recommendations.

.2 The Contractor shall be responsible for the supply, location and installation of all low voltage, control and fibre optic cables required for connection of the Circuit Switchers to the PCT Building as specified on the drawings and cable schedule.

.3 The Contractor shall be responsible for the placement of the Circuit Switchers in the locations as shown on the drawings and installation of anchor bolts (if necessary) for each circuit Switcher on its foundation as per manufacturers recommendations.

.4 The Contractor shall be responsible for filling the Circuit Switchers with SF6 gas (supplied with Circuit Switcher) as per manufacturer's instructions.

END OF SECTION

Part 1 General

1.1 DESCRIPTION

.1 Work Included:

.1 The Work covered under this Section includes but is not limited to the receiving, offloading, handling, installation, field testing and commissioning of 31 Owner supplied 138kV disconnect switches as detailed on the drawings provided.

.2 The installation contractor shall have experience with installation of the selected disconnect switches.

.2 Related Work:

.1 Section 26 00 05 - Electrical General Requirements.

.2 Section 26 00 10 – Grounding.

.3 Section 26 00 30 – Trenching.

.4 Section 26 00 35 – High Voltage Buswork & Insulators.

.5 Section 26 00 45 – Low Voltage Power Cables.

.6 Section 26 00 50 – Control Cables.

.7 Section 26 00 55 – Fiber Optic Cables.

.8 Section 26 00 65 – Cable & Wire Identification.

Part 2 Products

2.1 PRODUCTS SUPPLIED BY OWNER

.1 138kV, 3000A, Disconnect Switches.

.2 Southern States EV-2.

.3 Ten (10) switches have motorized operators and ground switches with interlocks.

.4 One (1) switch has a motorized operator and no ground switch.

.5 Twenty (20) switches are manual switches.

2.2 PRODUCTS SUPPLIED BY CONTRACTOR

.1 The Contractor shall supply all labour, tools, accessories, materials and equipment necessary to complete this section of work, which shall include but not be limited to all items not listed as FREE ISSUED TO CONTRACTOR on the Bus Work Materials List 133546898M501 and all cables listed on the cable schedule.

2.3 GENERAL REQUIREMENTS

.1 Quality Assurance and Testing:

.1 All cables, buswork and terminations shall be manufactured in accordance with the applicable standards referenced herein and the manufacturer's standard commercial practices as a minimum. All equipment selected by the Contractor must be approved by the Engineer.

Part 3 Execution

3.1 INSTALLATION

.1 The Contractor shall be responsible for mounting of the disconnect switches on the structures as indicated on the drawings and as per manufacturer’s installation instructions.

.2 The Contractor shall be responsible for the supply, location and installation of all connectors and fittings required for connection of the switches to the High Voltage Busses as specified on drawings.

.3 Where applicable, the Contractor shall be responsible for installation of the Motor Operator, the motor operator boxes, the interlocks (mechanical and electrical) between the phase and ground switches, the all linkages and all accessories required for the complete operation of the disconnect switches as per manufacturer’s instructions and as shown on the drawings.

.4 The Contractor shall be responsible for the supply, location, installation and termination of all low voltage, control and fibre optic cables required for connection of the switches to the PCT Building as specified on the drawings and cable schedule.

END OF SECTION

Part 1 General

1.1 DESCRIPTION

.1 Work Included:

.1 The Work covered under this Section includes but is not limited to the receiving, handling, installation, field testing, and commissioning of twenty (20) Owner supplied 138kV Potential Transformers, three (3) Station Service Voltage Transformers (SSVT), and two (2) sets of 3 Current Transformers as detailed on the drawings provided.

.2 The installation contractor shall have experience with installation of Arteche High Voltage Instrument Transformers.

.2 Related Work:

.1 Section 26 00 05 - Electrical General Requirements.

.2 Section 26 00 10 – Grounding.

.3 Section 26 00 30 – Trenching.

.4 Section 26 00 35 – High Voltage Buswork & Insulators.

.5 Section 26 00 45 – Low Voltage Power Cables.

.6 Section 26 00 50 – Control Cables.

.7 Section 26 00 55 – Fiber Optic Cables.

.8 Section 26 00 65 – Cable & Wire Identification.

Part 2 Products

2.1 PRODUCTS SUPPLIED BY OWNER

.1 Seven (7) 138kV Current Transformers – One spare.

.2 Arteche CA-245.

.3 Twenty Seven (27) 138kV Potential Transformers – Seven spare.

.4 Arteche UTE-145-OH.

.5 Four (4) 138kV Station Service Potential Transformers – One Spare.

.6 Arteche UGP-145.

2.2 PRODUCTS SUPPLIED BY CONTRACTOR

.1 The Contractor shall supply and install all labour, tools, accessories, materials and equipment necessary to complete this section of work, which shall include but not be limited to all items not listed as FREE ISSUED TO CONTRACTOR on the Bus Work Materials List 133546898M501 and all cables listed on the cable schedule.

.2 The Contractor is to supply and install the following equipment on each SSVT structure as indicated on drawing E-8023:

.1 One (1) Fused disconnect switch box c/w fuses. Switches shall be 400A, 240VAC 2 pole heavy duty with solid neutral, EATON DH225NWK or approved equivalent.

.2 One (1) Fuse box for secondary connections complete with fuses.

.3 One (1) junction box complete with SEL-2411 for SSVT monitoring.

.3 Two (2) three phase junction boxes (one for “A” and one for “B”) for each set of 3 PTs, as indicated on Drawing E-8107 and for each standalone PT (total of 16 junction boxes).

.4 Three (3) three phase junction boxes (one for “A”, one for “B”, and one for backup) for each set of three CTs as indicated on drawing E-8107 (total of 6 junction boxes)

2.3 GENERAL REQUIREMENTS

.1 Quality Assurance and Testing:

.1 All cables, buswork and terminations shall be manufactured in accordance with the applicable standards referenced herein and the manufacturer's standard commercial practices as a minimum. All equipment selected by the Contractor must be approved by the Engineer.

.2 Junction box details:

.1 All junction boxes shall be NEMA 4X – combustible insulated type Rx 1

.2 Material shall be AISI Stainless Steel 304L

.3 Exterior paint shall be ANSI #61 grey, 205uM (8 mils) per EN ISO 12944, environmental class 4

.4 All accessories shall be stainless steel

.5 The cabinets shall have anti-condensation treatment inside

.6 All cabinets shall contain CSA approval stickers.

2.4 Execution

2.5 INSTALLATION

.1 The Contractor shall be responsible for the supply, location and installation of all connectors and fittings required for connection of the PTs, CTs and SSVTs to the High Voltage Busses as specified on drawings.

.2 The Contractor shall be responsible for the supply, location, installation and termination of all low voltage, control and fibre optic cables required for connection of the PTs, CTs and SSVTs to the PCT Building as specified on the drawings and cable schedule.

END OF SECTION

Part 1 General

1.1 DESCRIPTION

.1 Work Included

.1 The Work covered under this Section includes but is not limited to the receiving, handling, installation, field testing and commissioning of two (2) Owner supplied 138kV Reactors as detailed on the drawings provided.

.2 The installation contractor shall have experience with installation of ABB High Voltage Transformers.

.2 Related Work:

.1 Section 26 00 05 – Electrical General Requirements.

.2 Section 26 00 10 – Grounding.

.3 Section 26 00 30 – Trenching.

.4 Section 26 00 35 – High Voltage Buswork & Insulators.

.5 Section 26 00 45 – Low Voltage Power Cables.

.6 Section 26 00 50 – Control Cables.

.7 Section 26 00 55 – Fiber Optic Cables.

.8 Section 26 00 65 – Cable & Wire Identification.

.9 Section 31 35 29 – Secondary Containment Systems – Geosynthetic Barrier.

Part 2 Products

2.1 Products Supplied by Owner

.1 138kV Reactors.

.2 ABB KKRU 145 NC 33500.

2.2 Products Supplied By Contractor

.1 The Contractor shall supply and install all labour, tools, accessories, materials and equipment necessary to complete this section of work, which shall include but not be limited to all items not listed as FREE ISSUED TO CONTRACTOR on the Bus Work Materials List 133546898M501 and all cables listed on the cable schedule.

2.3 GENERAL REQUIREMENTS

.1 Quality Assurance and Testing:

.1 All cables, buswork and terminations shall be manufactured in accordance with the applicable standards referenced herein and the manufacturer's standard

commercial practices as a minimum. All equipment selected by the Contractor must be approved by the Engineer.

Part 3 Execution

3.1 INSTALLATION

.1 The Contractor shall be responsible for the supply, location and installation of all connectors and fittings required for connection of the Reactors to the High Voltage Busses as specified on drawings.

.2 The Contractor shall be responsible for the placement of the Reactors in the locations as shown on the drawings and installation of anchor bolts (if necessary) for each Reactor on its foundation as per manufacturers recommendations.

.3 The Contractor shall be responsible for all installation checks and procedures as outlined in the manufacturer's installation procedures.

.4 The Contractor shall be responsible for the supply, location and installation of all low voltage, control and fibre optic cables required for connection of the Reactors to the PCT Building as specified on the drawings and cable schedule.

END OF SECTION

Part 1 General

1.1 DESCRIPTION

.1 Work Included:

.1 Work covered by this section shall include the supply of all tools, equipment, reporting and labour to perform construction checkout, testing, record keeping, and record submission of equipment supplied and installed under this Contract.

.2 The Engineer shall be contacted 24 hours prior to each checkout and test sequence and given the option of witnessing and testing.

.3 The Contractor shall be responsible for recording equipment checkout data on Contractor supplied forms and advising the Engineer of any deficiencies.

.4 The Contractor will observe all safety practices during the testing.

1.2 ITEMS SUPPLIED BY THE OWNER

.1 The Owner will not supply any labour, materials, supervision or equipment for this section of work.

Part 2 Products

2.1 EQUIPMENT

.1 The Contractor shall utilize only CSA recognized test equipment which has a currently valid calibration certificate under CSA or ISO.

Part 3 Execution

3.1 CONSTRUCTION CHECKOUT - GENERAL

.1 Construction checkout is considered to be part of the installation portion of the job and shall be completed within the time frame scheduled for installation. Where additional testing is specified or in cases where the equipment manufacturer(s) provides a non-energized checkout procedure, whether the equipment is supplied by the Contractor or by others, the checkouts are to be included.

.2 Contractor to provide all instruments, meters, equipment and personnel required to conduct tests and checkouts.

.3 Contractor is to submit test procedures that will be used by the Contractor to confirm quality assurance, conformance of the Work to CSA or ISO standards including copies of the test sheets to be used.

.4 All test sheets submitted to be in an organized, sorted presentation that groups common items together in numerical sequence.

.5 Contractor to submit on a weekly basis bound records of all tests on QA test record sheets duly signed by the parties carrying out the tests for the Engineer's review.

.6 Tests completed during any given week shall be submitted by the Friday of the following week.

.7 All tests are to be conducted in a non-destructive manner taking appropriate safety precautions, advise Engineer of any deficiencies immediately.

.8 The Engineer is to be advised in writing of any non-conformance issues immediately, disputes regarding non-conformance issues will be resolved by reference to the latest CSA and IEEE standards related to the item under test. Non-conformance to test will require re-testing by the Contractor after appropriate corrective actions are completed.

3.2 GROUND SYSTEM CHECKOUT

.1 The following checks shall be performed for all work on the installed grounding systems prior to back filling:

.1 General inventory inspection per specifications and drawings.

.2 Correct installation per drawings.

.3 Visual inspection of workmanship and appearance.

.4 Report checklist.

.2 The results shall be recorded and reported to the Engineer.

3.3 TEST EQUIPMENT

.1 The Contractor shall provide all instruments, meters, equipment and personnel required to conduct tests.

3.4 TEST RECORDS

.1 All tests shall be recorded on forms provided by the Contractor and reviewed by the Engineer. The forms shall show the equipment and cables tested, test voltages or currents, duration of test, time and date of test, Contractor's testing representative, witnessing Engineer and description and details of retesting, if any. The forms shall be completed by the Contractor and duplicate copies submitted to the Engineer.

.2 The Engineer will review and/or witness part or whole of tests specified to determine the quality of the workmanship and the condition of materials and equipment.

.3 The Contractor shall submit a complete set of test results for Engineer's review at the end of the project.

END OF SECTION

Part 1 General

1.1 DESCRIPTION

.1 Work Included:

.1 The work covered by this section shall include the supply, installation and commissioning of all electrical equipment for the Cape Tormentine Substation Protection, Controls and Telecommunications (PCT) Building:

1.2 RELATED WORK

.1	Electrical General Requirements	260005
.2	Grounding	260010
.3	Low Voltage Power Cables	260045
.4	Control Cables	260050

Part 2 Products

2.1 PRODUCTS SUPPLIED BY CONTRACTOR

.1 The Contractor shall supply and install all materials and equipment necessary to complete this section of work, which shall include but not be limited to the following:

.1 All required building service wiring
.2 Lighting
.3 Batteries
.4 Battery charger and disconnect switch
.5 Distribution panels for both AC and DC circuits
.6 HVAC (heat pump) system
.7 Automatic transfer switch
.8 Fire protection panel
.9 Eye wash station
.10 Exhaust fan
.11 Electric heater
.12 Fibre Optic termination panel
.13 Two (2) Telecommunications cabinets complete with all equipment as specified on drawings E-7151 and E-7153
.14 Cable tray and conduit as required.

.2 All equipment items shall be as specified on Drawing E-1111.

.3 All materials and/or components shall be new, and conform to the requirements of the applicable codes and standards governing materials of the type covered by this Specification.

2.2 ENVIRONMENTAL CONTROLS

.1 The building shall include a wall mounted heat pump unit (c/w heating and cooling) mounted on the exterior of the building:

.1 Provide the heat loss and heat gain calculations with the shop drawing submittals.

.2 The heat pump unit shall be powered from the AC load center (230V).

.3 The heat pump unit is to have a thermostat temperature control switch.

.4 The heat pump system must be sized to ensure the building does not exceed 25°C at all times. Maintaining the temperature at or below this level is important for the battery system life time and operation. The room temperature shall not drop below 10°C at any time. Separate back-up electric heat shall be provided to ensure the 10°C minimum temperature is maintained at all times.

.5 Heat pump units shall be provided with lead/lag control units with de-humidity control and failure alarm.

.6 Provide a building high temperature alarm (adjustable with a typical set point of 30°C) and low temperature alarm (adjustable with a typical set point of 5°C) installed and wired to the SCADA system.

.7 An exhaust hood and ventilation fan shall be installed on the wall of the battery room. The fan shall be installed on the outside wall and shall be able to exchange the associated battery room air every hour. The fan controller shall be equipped with an adjustable setting that allows an operator to set a minimum number of minutes that the fan will automatically run each hour (for Hydrogen ventilation). In addition to the timed operation, the fan shall otherwise automatically run as required to maintain the battery room temperature below 25˚C. A manual override switch shall also be installed to allow for manual operation of the fan. Adjustable fan controls and manual switch shall be located within the PCT building, but outside the battery room (near the door to the battery room).

.8 Ensure that all ventilation code requirements are met to prevent the accumulation of hydrogen gas during charging.

.9 The fan(s) are to be mounted with an exterior hood or other device to prevent blowing dust or snow from entering the building through the fan. The design life of the exhaust fan system shall be at least 40 years.

Part 3 Execution

3.1 GENERAL

.1 Coordinate Work with the Work of all other trades to avoid conflict. No extra financial compensation will be provided for relocation of work that is conflicting with other trades.

.2 The contractor shall be responsible for the supply and installation of all equipment required for a complete and operable system; including, but not limited to cable tray, conduit, building services wiring as well as all items specified on the drawings.

.1 Equipment and material to be CSA certified. Where there is no alternative to supplying equipment which is not CSA certified, obtain special approval from a qualified inspection agency.

.3 Building Services Wire and Cable

.1 Wiring from local junction boxes to individual lighting fixtures shall be by fixture wire, No. 12 AWG minimum size installed in flexible conduit. Wiring between fluorescent fixtures arranged in continuous or intermittent rows shall be by fixture wire, No. 14 AWG minimum size.

.4 Wiring Terminations:

.1 Lugs, terminals and screws used for termination of wiring shall be suitable for copper conductors.

.5 Panel Wiring:

.1 Contractor to provide all wiring necessary to completely install all equipment in the telecommunications panels as indicated on the drawings.

.2 Wiring in panel is to be installed in a neat and workmanlike manner.

.6 Lighting:

.1 Unless otherwise specified, junction boxes shall be a minimum size of 100mm and not less than 38mm deep, hot dipped galvanized sheet steel, with metal cover.

.2 The Contractor shall install fixtures in the locations shown on the drawings and at the noted elevations using structural steel mounting provisions. Before commencing with the lighting installation in any area, the Contractor shall examine the area for any obstructions which may interfere with the fixture installation. Significant conflicts in locations shall be referred to the Engineer for a decision. Fixture relocations within 10'-0" shall be at no extra cost.

.3 Lighting fixture mounting details indicate the general mounting arrangements to be followed but are not intended to be all encompassing. The Contractor shall be responsible for any miscellaneous structural components and fittings as necessary to mount the fixtures in the designated locations.

.4 All fixtures shall be completely wired in accordance with the latest requirements of the CEC with minimum No. 14 AWG fixture wire.

.7 Manufacturers and CSA Labels:

.1 Visible and legible after equipment is installed.

END OF SECTION

Part 1 General

1.1 RELATED WORK

.1 Section 01 35 43 - Environmental Protection.

.2 Section 01 74 12 – Reinstatement.

.3 Section 32 91 00 - Topsoil, Finish Grading and Seeding.

.4 Section 33 41 00 – Culverts.

1.2 REFERENCE STANDARDS

.1 Pertinent sections of the current PEI Department of Transportation, Infrastructure and Energy General Provisions and Contract Specifications for Highway Construction shall govern under this section.

1.3 TESTS AND INSPECTIONS

.1 Testing of materials and compaction of backfill and fill will be carried out by testing laboratory approved by Engineer.

.2 Contractor will pay costs of tests as specified in Section 01055 – Quality Control.

.3 Do not begin backfilling or filling operations until material has been approved for use by Engineer.

.4 Not later than 48 hours before backfilling or filling with approved material, notify Engineer so that compaction tests can be carried out by designated testing agency.

.5 Before commencing work, conduct, with Engineer, condition survey of existing buildings, trees and other plants, lawns, fencing, service poles, wires, survey bench marks and monuments which may be affected by work.

1.4 BURIED SERVICES

.1 Before commencing work verify the location of all buried services on and adjacent to the site.

.2 Arrange with appropriate authority for relocation of buried services that interfere with execution of work. Pay costs of relocating services.

Part 2 Products

2.1 MATERIALS

.1 Unless stated otherwise, materials imported to the site are to meet or exceed the PEI Department of Transportation, Infrastructure and Energy General Provisions and Contract Specifications for Highway Construction.

2.2 COMMON BACKFILL

.1 Approved material selected from site excavation, unfrozen and free from cinders, ashes, sods, organics, and refuse or other deleterious materials.

2.3 BORROW FOR SUBBASE

.1 Borrow for subbase shall be select borrow in accordance with PEI Department of Transportation, Infrastructure and Energy General Provisions and Contract Specifications for Highway Construction.

.2 Select borrow shall be non-plastic and composed of clean, uncoated particles free from lumps of clay and other deleterious material with a maximum particle size of 100 mm, and a maximum of 30% of the material passing the 4.75 mm sieve shall pass the 75 µm sieve.

2.4 GRANULAR BASE

.1 Gradation requirements for Class A aggregate:

Sieve Size	% Passing
31.5 mm	100
25.0 mm	95-100
19.0 mm	-
12.5 mm	50-83
9.5 mm	-
4.75 mm	30-60
1.18 µm	15-40
600 µm	10-32
300 µm	5-22
75 µm	3-9

.2 Granular base shall be Granular Class A in accordance with PEI Department of Transportation, Infrastructure and Energy General Provisions and Contract Specifications for Highway Construction.

.3 Class A material shall be processed by crushing quarried rock. The fine aggregate passing the 4.75 mm Sieve shall consist of the resulting particles from the crushing of the coarse aggregate.

2.5 DRAINAGE GRAVEL

.1 Drainage gravel shall be Class D in accordance with PEI Department of Transportation, Infrastructure and Energy General Provisions and Contract Specifications for Highway Construction.

.2 Gradation requirements for Class D Drainage Gravel

Sieve Size	% Passing
50.0 mm	100
38.0 mm	60-100
31.5 mm	40-100
25.0 mm	20-65
19.0 mm	0-30
12.5 mm	0-20
4.75 mm	0-5

.3 Class D material shall be processed by crushing quarried rock

Part 3 EXECUTION

3.1 STRIPPING AND STOCKPILING TOPSOIL AND SUBSOIL

.1 Any topsoil encountered in the areas to be excavated shall be stripped and stockpiled at a location on site as directed.

.2 Subsoil encountered in the areas to be excavated shall be stripped and stockpiled at a location on site as directed.

.3 Care shall be taken to avoid mixing topsoil with subsoil.

3.2 EXCAVATION

.1 Excavate as required to carry out work. Notify Engineer when excavations are complete. Inspection of excavation will be undertaken to determine if bearing is satisfactory. If bearings are unsatisfactory, additional excavation will be undertaken.

.2 Maintain crowns and cross slopes to provide good drainage.

.3 Excavated material can be used as common fill in landscaped areas. Excavated material can be used as fill in other designated areas.

3.3 SUBGRADE PREPARATION

.1 Access roads and pad area to be brought to subsurface grade where required with common borrow, after approval of Engineer.

.2 Prior to spreading of the select borrow sub-base, the subgrade shall be fine graded and compacted as specified.

.3 It shall be true to lines and grades as set out, in order to permit the placing of the base course with uniform thickness.

.4 Rolling shall be done with an approved vibration roller.

.5 All hollows and depressions which develop under rolling shall be filled and again rolled.

.6 The top 300 mm of subgrade to be compacted to 100% Standard Proctor Density.

.7 Contractor is not to proceed with borrow material until grades have been approved by the Engineer.

3.4 BORROW PREPARATION

.1 Borrow material shall be spread in uniform layers not exceeding 150 mm compacted thickness.

.2 Borrow shall be shaped, trimmed and rolled to the lines and grades as directed by the Engineer.

.3 Borrow is to be used to bring all grades to design elevation prior to granular placement. No common material is to be utilized.

.4 Rolling shall be done with an approved vibration roller.

.5 All hollows and depressions which develop under rolling shall be filled and rolled again.

.6 Borrow to be compacted to 95% Standard Proctor Density. The maximum acceptable deviation from grade at any location shall be 25 mm of that specified but not uniformly high or low.

.7 Contractor is not to proceed with the granular material until grades have been approved by the Engineer.

3.5 GRANULAR BASE

.1 Granular base material shall be spread in uniform layers not exceeding 150 mm compacted thickness.

.2 Granular base shall be shaped, trimmed and rolled to the lines and grades as directed by Engineer.

.3 Rolling shall be done with an approved vibration roller.

.4 All hollows and depressions which develop under rolling shall be filled and again rolled.

.5 Granular base to be compacted to 100% Standard Proctor Density. The maximum acceptable deviation from grade at any location shall be 10 mm of that specified but not uniformly high or low.

.6 Contractor is not to proceed with the asphalt base until grades have been approved by the Engineer.

3.6 FINISHING AND TOLERANCES

.1 Shape and compact to within 10mm of design elevations but not uniformly high or low.

.2 Do scarifying, blading, compacting or other methods of work as necessary to provide thoroughly compacted bed shaped to grades and cross sections as indicated or as directed.

.3 Finish back and side slopes of common material to neat condition, suitable for landscaping. Hand finish slopes that cannot be finished satisfactorily by machine.

3.7 FINAL CLEAN-UP

.1 Immediately after the completion of the work, or any consecutive portion of it, remove all unused material, refuse and dirt and leave the site in a neat and clean condition.

3.8 MAINTENANCE

.1 Maintain finish surfaces in condition conforming to this section until acceptance.

END OF SECTION

Part 1 General

1.1 SECTION INCLUDES

.1 Furnishing and installing a prefabricated and complete geosynthetic barrier and accessory materials including excavation of soil materials to form a secondary containment system around oil storage tanks and oil-filled electrical equipment.

.2 Geosynthetic barriers typically installed as a "Passive" secondary containment measure also used in "Active Containment" situations to impede or block the flow of oil from reaching drainage structures or waterways.

.3 Excavation and backfilling shall be performed to prevent damage to adjacent properties, buildings, structures, utilities, underground piping, electric cable, cable trays, grounding systems, and other facilities.

1.2 RELATED SECTIONS

.1 Section 31 00 10 – Earthwork and Site Grading.

1.3 REFERENCES

.1 IEEE Std 980-1994 R2001 (The Institute of Electrical and Electronics Engineers) Guide for Containment and Control of Oil Spills in Substations.

.2 Code of Federal Regulations (CFR) 40 CFR Protection of the Environment; PART 112-Oil Pollution Prevention.

.3 AASHTO No. 57 (American Association Of State Highway And Transportation Officials).

1.4 QUALITY ASSURANCE

.1 Design geosynthetic barrier under direct supervision of a Professional Engineer experienced in the design of such Work and to accommodate site conditions.

.2 Excavations shall comply with the local Building Code and published standards.

.3 Manufacturer shall be company(s) specializing in manufacturing geosynthetic barrier systems with minimum three years of documented experience.

.4 Installer shall be company(s) specializing in installation of geosynthetic barrier or similar systems with minimum three years of documented experience.

.5 Engage the services of an Independent Testing Laboratory to conduct testing required to determine gradation for cover material.

.6 Engage the services of a trained manufacturer’s representative to be on Project site during geosynthetic barrier installation.

1.5 SUBMITTALS

.1 See Section 01050 - Submittals for submittal procedures.

.2 Submit qualification and experience record for designers.

.3 Product Data: Provide component dimensions; describe components within assembly and anchorage or fasteners.

.4 Shop Drawings: Indicate geosynthetic barrier dimensions, affected related Work and details including overlap at joints. If required, include required permits and site restoration plans.

.5 Samples: Submit two samples 6 by 6 inches (150 by 150 mm) in size illustrating barrier materials.

.6 Design Data: Provide physical characteristics and engineering calculations where required and identify dimensional limitations.

.7 Warranty: Submit manufacturer warranty and ensure forms have been completed in Owner's name and registered with manufacturer.

1.6 DELIVERY, STORAGE AND PROTECTION

.1 Handle products of this section in accordance with manufacturer's requirements.

.2 Protect geosynthetic barrier materials during transport and on Project site storage prior to installation.

1.7 WARRANTY

.1 Warranty shall be in effect for the Service Life of installed product.

Part 2 Products

2.1 MANUFACTURERS

.1 Subject to Project requirements, manufacturers offering products to be incorporated in the work include the following:

.1 C.I.Agent Solutions®
11760 Commonwealth Dr.
Louisville, KY 40299
Office: 502-267-0101
Toll Free: 866-242-4368
Fax: 502-267-0181
Website: http://www.ciagent.com

.2 Approved equal.

2.2 MATERIALS

.1 This section references C.I. Agent products as a standard of acceptance. Alternatives will be considered.

.2 Geosynthetic barrier shall be designed to prevent flow of hydrocarbons from a site by becoming an impervious barrier in the event of an oil release and allow unrestricted water flow during normal rainfall or snow melt events.

.3 Barrier shall consist of three manufacturer assembled component parts:

.1 Barrier Front Section shall be a basic geotextile fabric made from synthetic materials that is both hydrophobic and oleophilic with high wicking capability.

.2 Barrier Middle Section shall be a layer of C.I.Agent®. C.I.Agent® is a blend of cross-linking polymers which are non-toxic, nonhazardous and environmentally friendly; made to encapsulate oils into a cohesive rubber-like mass.

.3 Barrier Back Section shall be Agent-X. Agent-X is two layers of a geotextile with C.I.Agent® polymers laminated between the layers.

2.3 PERFORMANCE

.1 Hydrocarbon flow rate: 0 gpm.

.2 Geosynthetic barrier must be able to flow a minimum of 3 GPM per square foot of material with one foot of head pressure.

.3 Solidify approximately a half gallon of oil per square foot.

.4 UV resistance: 70 percent.

.5 Oxidation resistance: 80 percent.

.6 Shall contain 12 to 16 oz. of loose C.I.Agent® polymers per square foot.

.7 Shall meet Spill Prevention Control and Countermeasures (SPCC) requirements in accordance with 40 CFR 112.

2.4 ACCESSORY MATERIALS

.1 Reinforcement bars, wood stakes or other supports.

.2 Staple gun.

.3 Galvanized staples.

.4 Hammer.

.5 Shovel.

.6 Rake.

.7 Trench machine.

.8 Steel or heavy duty plastic angle – length capable of spanning between supports.

.9 Bentonite®.

2.5 FABRICATION

.1 Fabricate components with minimum clearances around perimeter of assembly, yet enabling installation and dynamic movement of perimeter seal.

.2 Accurately fit and secure joints and corners. Make joints flush.

.3 Prepare components to receive anchor devices.

.4 Arrange fasteners and attachments to conceal from view.

2.6 MATERIAL FOR COVER

.1 Gradation requirements shall be determined in accordance with AASHTO No. 57.

.2 For fills categorized as "crushed stone" or equivalent clean stone comply with the following:

Coarse Aggregate:

Sieve Size		AASHTO No. 57 (percent passing)
50 mm	2 inch	-
37.5 mm	1.5 inch	100 min
25 mm	1 inch	95 - 100
19.0 mm	0.75 inch	-
12.5 mm	0.5 inch	25 - 60
9.5 mm	0.375 inch	-
4.75 mm	No. 4	10 max
2.36 mm	No. 8	5 max
1.18 mm	No. 16	-

Part 3 Execution

3.1 EXAMINATION

.1 Verify dimensions, tolerances, and method of attachment.

.2 Verify that anchorage devices have been properly installed and located.

3.2 INSTALLATION

.1 Avoid damage wherever excavation is being done. The width of such excavation shall not exceed the width actually necessary for the proper prosecution of the work.

.2 Install geosynthetic barrier in accordance with manufacturer's instructions.

.3 Overlap and splice barrier sections, as necessary, according to the shop drawings and the manufacturer's recommendations.

.4 Barrier should not be cut or trimmed without the express approval of the manufacturer or their representative.

.5 Attach to grade to permit sufficient adjustment to accommodate construction tolerances and other irregularities allowing expeditious progress of the work.

.6 Comply with site owner and operator's safety practices particularly in close proximity to active electrical equipment.

3.3 FIELD QUALITY CONTROL

.1 Perform gradation testing to indicate compliance with AASHTO #57.

.2 Verify barrier is firmly attached to supports before placing cover material.

3.4 CLEANING AND PROTECTION

.1 Remove any protective material.

.2 Repair minor damage to surfaces to the satisfaction of the manufacturer prior to cover material being installed.

.3 Protect barrier during installation of cover material.

END OF SECTION

Part 1 General

1.1 RELATED WORK

.1 Section 01 35 43 – Environmental Protection.

.2 Section 31 00 10 – Earthwork and Site Grading.

1.2 REFERENCES

.1 ASTM International:

.1 ASTM A53/A53M, Standard Specification for Pipe, Steel, Black and Hot-Dipped, Zinc-Coated Welded and Seamless.

.2 ASTM A90/A90M, Standard Test Method for Weight of Coating on Iron and Steel Articles with Zinc or Zinc-Alloy Coatings.

.3 ASTM A121, Standard Specification for Zinc-Coated (Galvanized) Steel Barbed Wire.

.4 A653/A653M, Standard Specification for Steel Sheet, Zinc-Coated (Galvanized) or Zinc-Iron Alloy-Coated (Galvannealed) by the Hot-Dip Process.

.5 ASTM C618, Standard Specification for Coal Fly Ash and Raw or Calcined Natural Pozzolan for Use as a Mineral Admixture in Concrete.

.6 ASTM F1664, Standard Specification for Poly(Vinyl Chloride) (PVC)-Coated Steel Tension Wire Used with Chain-Link Fence.

.7 ASTM A123/A123M, Standard Specification for Zinc (Hot Dip Galvanized) coatings on Iron and Steel Products.

.2 Canadian General Standards Board (CGSB):

.1 CAN/CGSB-138.1-96, Fabric for Chain Link Fence.

.2 CAN/CGSB-138.2-96, Steel Framework for Chain Link Fence.

.3 CAN/CGSB-138.3-96, Installation of Chain Link Fence.

.4 CAN/CGSB-138.4-96, Gates for Chain Link Fence.

.5 CAN/CGSB-1.181-99, Ready-Mixed Organic Zinc-Rich Coating.

.3 CSA International:

.1 CSA A23.1/A23.2-14, Concrete Materials and Methods of Concrete Construction/Test Methods and Standard Practices for Concrete.

.2 CAN/CSA-A3000-13, Cementitious Materials Compendium.

1.3 ACTION AND INFORMATIONAL SUBMITTALS

.1 Submit in accordance with Section 01050 - Submittals.

.2 Product Data:

.1 Submit manufacturer's instructions, printed product literature and data sheets for concrete mixes, fences, posts and gates and include product characteristics, performance criteria, physical size, finish and limitations.

1.4 DELIVERY, STORAGE AND HANDLING

.1 Deliver, store and handle materials in accordance with Section 01090 – Material and Equipment and with manufacturer's written instructions.

.2 Delivery and Acceptance Requirements: deliver materials to site in original factory packaging, labelled with manufacturer's name and address.

.3 Storage and Handling Requirements:

.1 Store materials in accordance with manufacturer's recommendations.

.2 Store and protect fence and gate materials from damage.

.3 Replace defective or damaged materials with new.

Part 2 Products

2.1 MATERIALS

.1 Concrete mixes and materials: in accordance with CSA A23.1:

.1 Nominal coarse aggregate size: 20 mm.

.2 Compressive strength: 25 MPa minimum at 28 days.

.2 Chain-link fence fabric: to CAN/CGSB-138.1:

.1 Type 1, Class A, heavy duty, Grade 3.

.2 Height of fabric: as indicated.

.3 Posts, braces and rails: to CAN/CGSB-138.2, galvanized steel pipe. Dimensions as indicated.

.4 Bottom tension wire: to CAN/CGSB-138.2, single strand, galvanized steel wire.

.5 Tie wire fasteners: steel wire.

.6 Tension bar: to ASTM A653/A653M, 5 x 20 mm minimum galvanized steel.

.7 Gates: to CAN/CGSB-138.4.

.8 Gate frames: to ASTM A53/A53M, galvanized steel pipe, standard weight 45 mm outside diameter pipe for outside frame, 35 mm outside diameter pipe for interior bracing:

.1 Fabricate gates as indicated with electrically welded joints, and hot-dip galvanized after welding.

.2 Fasten fence fabric to gate with twisted selvage at top.

.3 Furnish gates with galvanized malleable iron hinges, latch and latch catch with provision for padlock which can be attached and operated from either side of installed gate.

.4 Furnish double gates with chain hook to hold gates open and centre rest with drop bolt for closed position.

.9 Fittings and hardware: to CAN/CGSB-138.2, galvanized steel:

.1 Tension bar bands: 3 x 20 mm minimum galvanized steel or 5 x 20 mm minimum aluminum.

.2 Post caps to provide waterproof fit, to fasten securely over posts and to carry top rail.

.3 Overhang tops to provide waterproof fit, to hold top rails and an outward projection to hold barbed wire overhang.

.4 Include projection with clips or recesses to hold 3 strands of barbed wire spaced 100 mm apart.

.5 Projection of approximately 300 mm long to project from fence at 45 degrees above horizontal.

.6 Turnbuckles to be drop forged.

.10 Organic zinc rich coating: to CAN/CGSB-1.181.

.11 Barbed wire: to CAN/CGSB-138.2, 2.5 mm diameter.

.12 Grounding rod: to Section 07010 - Grounding - Primary 3 m long.

2.2 FINISHES

.1 Galvanizing:

.1 For chain link fabric: to CAN/CGSB-138.1 Grade 2.

.2 For pipe: 550 g/m^2 minimum to ASTM A90.

.3 For barbed wire: to CAN/CGSB-138.2.

.4 For other fittings: to ASTM A123/A123M.

Part 3 Execution

3.1 EXAMINATION

.1 Verification of Conditions: verify conditions of substrate previously installed under other Sections or Contracts are acceptable for fence and gate installation in accordance with manufacturer's written instructions:

.1 Visually inspect substrate in presence of Engineer.

.2 Inform Engineer of unacceptable conditions immediately upon discovery.

.3 Proceed with installation only after unacceptable conditions have been remedied and after receipt of written approval to proceed from Engineer.

3.2 PREPARATION

.1 Temporary Erosion and Sedimentation Control:

.1 Provide temporary erosion and sedimentation control measures to prevent soil erosion and discharge of soil-bearing water runoff or airborne dust to adjacent properties and walkways, according to requirements of authorities having jurisdiction.

.2 Inspect, repair, and maintain erosion and sedimentation control measures during construction until permanent vegetation has been established.

.3 Remove erosion and sedimentation controls and restore and stabilize areas disturbed during removal.

.2 Grading:

.1 Remove debris and correct ground undulations along fence line to obtain smooth uniform gradient between posts:

.1 Provide 50 mm clearance between bottom of fence and ground surface.

3.3 ERECTION OF FENCE

.1 Erect fence along lines as indicated and to CAN/CGSB-138.3.

.2 Excavate post holes to dimensions indicated.

.3 Space line posts at equal intervals, but no greater than 3 m apart, measured parallel to ground surface.

.4 Space straining posts at equal intervals not to exceed 150 m if distance between end or corner posts on straight continuous lengths of fence over reasonably smooth grade is greater than 150 m.

.5 Install additional straining posts at sharp changes in grade and where directed by Engineer.

.6 Install corner post where change in alignment exceeds 10 degrees.

.7 Install end posts at end of fence and at buildings:

.1 Install gate posts on both sides of gate openings.

.8 Place concrete in post holes then embed posts into concrete to depths indicated:

.1 Extend concrete 50 mm above ground level and slope to drain away from posts.

.2 Brace to hold posts in plumb position and true to alignment and elevation until concrete has set.

.9 Install fence fabric after concrete has cured, minimum of 7 days.

.10 Install brace between end and gate posts and nearest line post, placed in centre of panel and parallel to ground surface:

.1 Install braces on both sides of corner and straining posts in similar manner.

.11 Install overhang tops and caps.

.12 Install top rail between posts and fasten securely to posts and secure waterproof caps and overhang tops.

.13 Install bottom tension wire, stretch tightly and fasten securely to end, corner, gate and straining posts with turnbuckles and tension bar bands.

.14 Lay out fence fabric. Stretch tightly to tension recommended by manufacturer and fasten to end, corner, gate and straining posts with tension bar secured to post with tension bar bands spaced at 300 mm intervals:

.1 Knuckled selvedge at bottom.

.2 Twisted selvedge at top.

.15 Secure fabric to top rails, line posts and bottom tension wire with tie wires at 450 mm intervals:

.1 Give tie wires minimum two twists.

.16 Install barbed wire strands and clip securely to lugs of each projection.

.17 Install grounding rods as indicated.

3.4 INSTALLATION OF GATES

.1 Install gates in locations as indicated.

.2 Level ground between gate posts and set gate bottom approximately 50 mm above ground surface.

.3 Determine position of centre gate rest for double gate:

.1 Cast gate rest in concrete as directed.

.2 Dome concrete above ground level to shed water.

.4 Install gate stops where indicated.

3.5 TOUCH UP

.1 Clean damaged surfaces with wire brush removing loose and cracked coatings. Apply two coats of organic zinc-rich paint to damaged areas as indicated:

.1 Pre-treat damaged surfaces according to manufacturers' instructions for zinc-rich paint.

3.6 CLEANING

.1 Progress Cleaning: clean in accordance with Section 010070 – Temporary Controls.

.1 Leave Work area clean at end of each day.

.2 Final Cleaning: upon completion remove surplus materials, rubbish, tools and equipment in accordance with Section 010070 – Temporary Controls.

END OF SECTION

Part 1 General

1.1 RELATED WORK

.1 Section 01 35 43 – Environmental Protection.

.2 Section 01 74 12 – Reinstatement.

.3 Section 31 00 10 – Earthwork and Site Grading.

1.2 SOURCE QUALITY CONTROL

.1 Advise Engineer of sources of topsoil to be utilized 7 days in advance of starting work.

.2 Contractor is responsible for soil analysis and requirements for amendments to supply topsoil as specified.

Part 2 Products

2.1 MATERIALS

.1 Topsoil: Friable loam containing minimum of 4% organic matter for clay loams and 2% for sandy loams to maximum of 25% by volume, and having a pH of 5.5 to 7.5. Topsoil containing subsoil, roots, stones larger than 15 mm, weeds, couch grass, crabgrass, foreign objects or toxic materials is not acceptable.

.2 Fertilizer: Complete synthetic, slow release with 35% of nitrogen content in water-insoluble form.

.3 Lime: Agricultural grade ground limestone containing total 85% carbonates and graded as follows:

Sieve Size	% Passing by Weight
1 mm	90
0.125 mm	50

.4 Seed: Certified Canada #1 Grade to Government of Canada Seeds Regulations having minimum germination of 80% and minimum purity of 85%. Seed mixture: 50% Kentucky Blue Grass; 40% Creeping Red Fescue; 10% Perennial Rye Grass. Deliver and store grass seed in original containers showing:

.1 Analysis of seed mixture.

.2 Percentage of pure seed.

.3 Year of Production.

.4 Net Mass.

.5 Date when tagged and location.

.6 Percent of germination.

.7 Name and address of distributor.

.5 Mulch: Organic mulch.

.6 Erosion Control Agent: Asphalt emulsion to CAN2-16.2-M, Type 2.

.7 Water: Clean, fresh, and free from impurities that inhibit plant growth.

.8 Sod: As per Division 809 of the PEI Department of Transportation, Infrastructure and Energy General Provisions and Contract Specifications for Highway Construction.

Part 3 Execution

3.1 PREPARATION

.1 Grade subgrade to eliminate uneven areas and rough spots, and to ensure positive drainage. Remove all debris, roots, branches, stones in excess of 50 mm diameter, and other deleterious materials. Remove any subsoil that has been contaminated with oil, gasoline, calcium chloride, or sodium chloride. Dispose of contaminated material off site.

.2 Cultivate area to depth of 50 mm prior to placing topsoil.

3.2 PLACING AND SPREADING OF TOPSOIL

.1 Do not spread topsoil until subgrade is to line and elevation indicated.

.2 Spread topsoil in uniform layers not exceeding 150 mm, over unfrozen subgrade free of standing water.

.3 Spread topsoil to a minimum depth of 100 mm after settlement and 80% compaction.

.4 Manually spread topsoil around trees, shrubs and obstacles.

.5 Fine grade topsoil to lines and elevations indicated, leaving surface smooth and uniform with a fine loose texture. Obtain approval of topsoil grade and depth before proceeding with seeding or sodding.

3.3 APPLICATION OF LIME AND FERTILIZER

.1 Apply lime at rate of 50 kg per 100 square metres. Mix lime thoroughly into full depth of topsoil prior to application of fertilizer.

.2 For dry seeding and sodding apply fertilizer with mechanical spreaders over entire area of topsoil at rate of 15 kg of nitrogen per 100 square metres.

3.4 FINISH GRADING

.1 Grade to eliminate rough spots and low areas and ensure positive drainage. Prepare loose friable bed by means of cultivation and subsequent raking.

.2 Consolidate topsoil to required bulk density using approved equipment. Leave surfaces smooth, uniform and firm against deep footprinting.

3.5 ACCEPTANCE OF TOPSOIL

.1 Engineer will inspect and test topsoil in place and determine acceptance of material, depth of topsoil and finish grading. Approval of topsoil material subject to soil testing and analysis.

3.6 SURPLUS MATERIAL

.1 Dispose of materials not required off site.

3.7 DRY SEEDING

.1 Apply seed with mechanical spreader at a rate of 2 kg per 100 square metres, cover and roll with a roller having a mass of 50 kg per metre of width.

.2 Apply water to promote germination and growth. Water adequately to assure continued growth. Control water to prevent washouts.

END OF SECTION

Part 1 General

1.1 RELATED WORK

.1 Section 01 35 43 – Environmental Protection.

.2 Section 31 00 10 – Earthwork and Site Grading.

.3 Section 32 91 00 – Topsoil, Finish Grading and Seeding.

1.2 REFERENCES

.1 A257 SERIES-14 - Standards for concrete pipe and manhole sections.

.2 CAN/CSA-B182.1-M87, Plastic Drain and Sewer Pipe and Pipe Fittings.

.3 CAN/CSA-B182.4-M90, Profile (Ribbed) PVC Sewer Pipe and Fittings.

.4 CAN/CSA-G401-14, Corrugated Steel Pipe Products.

1.3 SHOP DRAWINGS

.1 Submit shop drawings in accordance with Section 01050 – Submittals.

.2 Shop drawings to indicate proposed method for installing carrier pipe for undercrossings.

1.4 MATERIAL CERTIFICATION

.1 If requested, submit manufacturer's test data and certification at least 2 weeks prior to commencing work.

.2 Certification to be marked on pipe.

1.5 SCHEDULING OF WORK

.1 Schedule work to minimize interruptions to existing services and to maintain existing flows during construction.

.2 Submit schedule of expected interruptions for approval and adhere to approved schedule.

1.6 MANUFACTURERS INSTRUCTIONS

.1 Make available 1 copy of manufacturer's installation instructions.

Part 2 Products

2.1 PLASTIC PIPE

.1 Type Corrugated HDPE:

.1 Sol-Flo Max or approved alternate.

.2 Locked-in gasket and integral bell system.

.3 Nominal lengths: 6 m.

.4 Smooth wall interior.

.2 Type PSM Poly (Vinyl Chloride): to ASTM D3034:

.1 Standard Dimensional Ratio SDR: 35.

.2 Locked-in gasket and integral bell system.

.3 Nominal lengths: 4 m.

2.2 CONCRETE PIPE

.1 Reinforced circular concrete pipe and fittings: to ASTM C76M, Class III, designed for flexible rubber gasket joints to ASTM C443M.

.2 Lifting holes:

.1 Pipe 900 mm and less diameter: no lift holes.

.2 Pipe greater than 900 mm diameter: lift not to exceed two in each pipe.

.3 Provide pre-fabricated plugs to effectively seal lift holes after installation of pipe.

2.3 BACKFILL MATERIAL

.1 In accordance with Section 31 00 10 – Earthwork and Site Grading.

2.4 BEDDING MATERIAL

.1 Place bedding material to spring line of concrete pipe. PVC pipe to be buried with 150 mm over top.

2.5 JOINT MORTAR

.1 Portland Cement: to CAN/CSA-A5, normal type 10. Mortar: one part Portland cement to two parts clean sharp sand mixed with minimum amount of water to obtain optimum consistency for use intended. Do not use additives.

Part 3 Execution

3.1 PREPARATION

.1 Clean and dry pipes and fittings before installation.

.2 Obtain Engineer's approval of pipes and fittings prior to installation.

.3 Inspect and remove defective material.

3.2 TRENCHING

.1 Do not allow contents of any sewer or sewer connection to flow into trench.

.2 Trench alignment and depth require approval prior to placing bedding material and pipe.

3.3 BEDDING

.1 Place bedding in unfrozen condition.

.2 Place bedding materials in uniform layers not exceeding 150 mm compacted thickness to depth as indicated.

.3 Shape bed true to grade and to provide continuous, uniform bearing surface for pipe. Do not use blocks when bedding pipe.

.4 Shape transverse depressions as required to suit joints.

.5 Compact each layer full width of bed to at least 100% Standard Proctor.

.6 Fill excavation below bottom of specified bedding adjacent to manholes or structures with compacted bedding material backfill.

3.4 INSTALLATION

.1 Lay and join pipes in accordance with manufacturer's recommendations and to approval of Engineer.

.2 Handle pipe using approved methods. Do not use chains or cables passed through rigid pipe bore so that weight of pipe bears upon pipe ends.

.3 Contractor is to use a laser for both grade and alignment for the installation of sewer mains.

.4 Lay pipes on prepared bed, true to line and grade, with pipe invert smooth and free of sags or high points. Ensure barrel of each pipe is in contact with shaped bed throughout its full length.

.5 Commence laying at outlet and proceed in upstream direction with socket ends of pipe facing upgrade.

.6 All storm sewer main is to be installed using a laser for alignment and grade.

.7 Do not allow water to flow through pipe during construction, except as may be permitted by Engineer.

.8 Whenever work is suspended, install removable watertight bulkhead at open end of last pipe laid to prevent entry of foreign materials.

.9 Install plastic pipe and fittings in accordance with CSA B182.11.

.10 Joints:

.11 Concrete, clay and asbestos cement pipe:

.1 Install gaskets as recommended by manufacturer.

.2 Support pipes with hand slings or crane, as required, to minimize lateral pressure on gasket and maintain concentricity until gasket is properly positioned.

.3 Align pipes before joining.

.4 Maintain pipe joints free from mud, silt, gravel and other foreign material.

.5 Avoid displacing gasket or contaminating with dirt or other foreign material. Remove disturbed or dirty gaskets; clean, lubricate and replace before joining is attempted.

.6 Complete each joint before laying next length of pipe.

.7 Minimize joint deflection after joint has been made to avoid joint damage.

.8 Apply sufficient pressure in making joints to ensure that joint is complete as outlined in manufacturer's recommendations.

.9 Mortared joints:

.1 Pipe interior: circular pipes 700 mm diameter and larger, and arch or elliptical pipe equivalent to 900 mm diameter or larger shall have interior gap between ends of adjacent pipes filled with mortar. Apply mortar minimum 7 days after backfilling has been completed to allow pipe settlement to occur. Finish interior surface of joints smooth.

.2 Pipe exterior: for bell and spigot pipe, use mortar to seal outside of joints. Press and bed mortar into place. Allow mortar to set minimum of 1 h before backfilling.

.12 When any stoppage of work occurs, restrain pipes to prevent "creep" during down time.

.13 Plug lifting holes with approved prefabricated plugs, set in shrinkage compensating grout.

.14 Ends of pipes to be cut at 45˚ angle as per the PEI Department of Transportation and Infrastructure Renewal.

.15 Cut pipes as required for special inserts, fittings or closure pieces, as recommended by pipe manufacturer, without damaging the pipe or its coating and to leave smooth end at right angles to axis of pipe.

.16 Make watertight connections to manholes and catch basins. Use shrinkage compensating grout when suitable gaskets are not available.

.17 Use prefabricated saddles or approved field connections for connecting pipes to existing sewer pipes. Joint to be structurally sound and watertight.

.18 Temporarily plug open upstream ends of pipes with removable watertight concrete, steel or plastic bulkheads.

3.5 PIPE SURROUND

.1 Place surround material in unfrozen condition.

.2 Upon completion of pipe laying, and after Engineer has inspected pipe joints, surround and cover pipes as indicated.

.3 Hand place surround material in uniform layers not exceeding 150 mm compacted thickness as indicated. Do not dump material within .3 m of pipe.

.4 Place layers uniformly and simultaneously on each side of pipe.

.5 Compact each layer from pipe invert to mid height of pipe to at least 100% Standard Proctor.

.6 Compact each layer from mid height of pipe to underside of backfill to at least 100% Standard Proctor.

3.6 BACKFILL

.1 Place backfill material in unfrozen condition.

.2 Place backfill material, above pipe surround in uniform layers not exceeding 300 mm compacted thickness up to grades as indicated.

.3 Under paving and walks, compact backfill to at least 100% Standard Proctor. In other areas, compact to at least equal to the density of adjacent, undisturbed soil.

3.7 INSULATION

.1 Install insulation as directed by Engineer.

3.8 FIELD TESTING

.1 Repair or replace pipe, pipe joint or bedding found defective.

.2 Remove foreign material from culvert by flushing with water.

END OF SECTION

APPENDIX I

DRAWING LIST

Project No. 133546898

Transmittal Drawing List

Drawing No. Sheet No.	Client Drawing No.	Rev. No.	Drawing Title	Drawing By
C-1001		B	SITE PLAN BORDEN SUBSTATION	Stantec
C-1002		B	ACCESS ROAD PROFILES BORDEN SUBSTATION	Stantec
C-1003		B	SITE PLAN & PROFILES CAPE TORMENTINE RISER STATION	Stantec
E-1001		E	ELECTRICAL SITE PLAN BORDEN SUBSTATION	Stantec
E-1002		E	LAYOUT BORDEN SUBSTATION	Stantec
E-1003		A	LAYOUT BORDEN SUBSTATION EXISTING 138KV STATION	Stantec
E-1011		C	ELECTRICAL SITE PLAN CAPE TORMENTINE RISER STATION	Stantec
E-1012		D	LAYOUT CAPE TORMENTINE RISER STATION	Stantec
E-1101		C	LAYOUT BORDEN SUBSTATION CONTROL BUILDING	Stantec

Drawing No. Sheet No.	Client Drawing No.	Rev. No.	Drawing Title	Drawing By
E-1111		B	LAYOUT CAPE TORMENTINE RISER STATION CONTROL BUILDING	Stantec
E-1201		B	TRENCHING LAYOUT BORDEN SUBSTATION	Stantec
E-1211		B	TRENCHING LAYOUT CAPE TORMENTINE RISER STATION	Stantec
E-1301		B	GROUNDING LAYOUT BORDEN SUBSTATION	Stantec
E-1311		B	GROUNDING LAYOUT CAPE TORMENTINE RISER STATION	Stantec
E-1401		B	LIGHTNING PROTECTION LAYOUT BORDEN SUBSTATION	Stantec
E-1411		B	LIGHTNING PROTECTION LAYOUT CAPE TORMENTINE RISER STATION	Stantec
E-1501		B	LIGHTING LAYOUT BORDEN SUBSTATION	Stantec
E-1511		B	LIGHTING LAYOUT CAPE TORMENTINE RISER STATION	Stantec
E-2001		C	ELEVATIONS BORDEN SUBSTATION SECTION A-A	Stantec

Drawing No. Sheet No.	Client Drawing No.	Rev. No.	Drawing Title	Drawing By
E-2002		D	ELEVATIONS BORDEN SUBSTATION SECTION B-B	Stantec
E-2003		C	ELEVATIONS BORDEN SUBSTATION SECTION C-C	Stantec
E-2004		D	ELEVATIONS BORDEN SUBSTATION SECTION D-D	Stantec
E-2005		C	ELEVATIONS BORDEN SUBSTATION SECTION E-E	Stantec
E-2006		C	ELEVATIONS BORDEN SUBSTATION SECTION F-F, G-G, AND H-H	Stantec
E-2007		C	ELEVATIONS BORDEN SUBSTATION SECTION I-I, J-J, AND K-K	Stantec
E-2101		D	ELEVATIONS CAPE TORMENTINE RISER STATION SECTIONS A-A, B-B, AND C-C	Stantec
E-5001		B	ELECTRICAL DETAILS BORDEN SUBSTATION TYPICAL SUBSTATION DETAILS	Stantec
E-5011		B	ELECTRICAL DETAILS CAPE TORMENTINE RISER STATION TYPICAL SUBSTATION DETAILS	Stantec
E-5201		B	ELECTRICAL DETAILS BORDEN AND CAPE TORMENTINE TYPICAL TRENCHING DETAILS	Stantec

Drawing No. Sheet No.	Client Drawing No.	Rev. No.	Drawing Title	Drawing By
E-5202		B	ELECTRICAL DETAILS BORDEN AND CAPE TORMENTINE TYPICAL TRENCHING DETAILS	Stantec
E-5301		B	ELECTRICAL DETAILS BORDEN AND CAPE TORMENTINE TYPICAL GROUNDING DETAILS	Stantec
E-5302		B	ELECTRICAL DETAILS BORDEN AND CAPE TORMENTINE TYPICAL GROUNDING DETAILS	Stantec
E-5303		B	ELECTRICAL DETAILS BORDEN AND CAPE TORMENTINE TYPICAL GROUNDING DETAILS	Stantec
E-5501		B	ELECTRICAL DETAILS BORDEN AND CAPE TORMENTINE TYPICAL LIGHTING DETAILS	Stantec
E-7012		B	NETWORK ARCHITECTURE CAPE TORMENTINE RISER STATION COMMUNICATIONS BLOCK DIAGRAM	Stantec
E-7151		B	CABINET LAYOUT (EXTERNAL) CAPE TORMENTINE RISER STATION PANEL 502	Stantec
E-7153		B	CABINET LAYOUT (EXTERNAL) CAPE TORMENTINE RISER STATION PANEL 503	Stantec
E-8000		B	ELECTRICAL LEGEND BORDEN SUBSTATION PROTECTION AND CONTROLS	Stantec
E-8001		E	SINGLE LINE DIAGRAM BORDEN SUBSTATION	Stantec

Drawing No. Sheet No.	Client Drawing No.	Rev. No.	Drawing Title	Drawing By
E-8002		E	PROTECTION AND CONTROL SLD BORDEN SUBSTATION TRANSFORMER X3 & CABLE #3	Stantec
E-8003		E	PROTECTION AND CONTROL SLD BORDEN SUBSTATION Y113 & CABLE #4	Stantec
E-8004		E	PROTECTION AND CONTROL SLD BORDEN SUBSTATION Y107 & Y109	Stantec
E-8005		E	PROTECTION AND CONTROL SLD BORDEN SUBSTATION BUS BAR PROTECTION	Stantec
E-8023		A	POWER DISTRIBUTION DIAGRAM BORDEN SUBSTATION POWER VT FUSE & MONITORING BOXES	Stantec
E-8101		B	AC ELEMENTARY THREE LINE DIAGRAM BORDEN SUBSTATION X3,C3 & R3 'A' & 'B' PROTECTION	Stantec
E-8103		B	AC ELEMENTARY THREE LINE DIAGRAM BORDEN SUBSTATION Y113, C4, R4, 'A' & 'B' PROTECTION	Stantec
E-8105		B	AC ELEMENTARY THREE LINE DIAGRAM BORDEN SUBSTATION BB1, BB2, Y107, Y109 'B' PROTECTION	Stantec
E-8107		A	AC ELEMENTARY THREE LINE DIAGRAM BORDEN SUBSTATION CT & PT JUNCTION BOXES	Stantec
E-9011		A	POWER DISTRIBUTION DIAGRAM CAPE TORMENTINE RISER STATION DC STATION SERVICE	Stantec

Drawing No. Sheet No.	Client Drawing No.	Rev. No.	Drawing Title	Drawing By
E-9021		A	POWER DISTRIBUTION DIAGRAM CAPE TORMENTINE RISER STATION AC STATION SERVICE	Stantec
S-1001		B	LAYOUT PLAN BORDEN SUBSTATION STRUCTURAL SUPPORTS	Stantec
S-1002		A	LAYOUT PLAN EXISTING BORDEN SUBSTATION STRUCTURAL SUPPORTS	Stantec
S-1051		B	LAYOUT PLAN BORDEN SUBSTATION FOUNDATIONS	Stantec
S-1052		A	LAYOUT PLAN EXISTING BORDEN SUBSTATION FOUNDATIONS	Stantec
S-1101		B	LAYOUT PLAN CAPE TORMENTINE RISER STATION STRUCTURAL SUPPORTS	Stantec
S-1151		B	LAYOUT PLAN CAPE TORMENTINE RISER STATION FOUNDATIONS	Stantec
S-4001		B	PLAN, SECTIONS AND DETAIL BORDEN SUBSTATION STRUCTURE S01A AND SO1B	Stantec
S-4002		B	PLAN, SECTIONS AND DETAILS BORDEN SUBSTATION STRUCTURE S02	Stantec
S-4003		B	PLAN, SECTIONS AND DETAILS BORDEN SUBSTATION STRUCTURE S03A AND S03B	Stantec

Drawing No. Sheet No.	Client Drawing No.	Rev. No.	Drawing Title	Drawing By
S-4004		B	PLAN AND SECTIONS BORDEN SUBSTATION STRUCTURE S04A AND S04B	Stantec
S-4005		B	PLAN, SECTIONS AND DETAILS BORDEN SUBSTATION STRUCTURE S05	Stantec
S-4006		B	PLAN, SECTIONS AND DETAIL BORDEN SUBSTATION STRUCTURE S06	Stantec
S-4007		B	PLAN AND SECTIONS BORDEN SUBSTATION STRUCTURE S07	Stantec
S-4008		B	PLAN AND SECTIONS BORDEN SUBSTATION STRUCTURE S08A AND S08B	Stantec
S-4009		B	PLAN, SECTIONS AND DETAILS BORDEN SUBSTATION STRUCTURE S09	Stantec
S-4010		B	PLAN AND SECTIONS BORDEN SUBSTATION STRUCTURE S10A & S10B 1 OF 3	Stantec
S-4011		B	SECTIONS AND DETAILS BORDEN SUBSTATION STRUCTURE S10A & S10B 2 OF 3	Stantec
S-4012		B	SECTIONS AND DETAILS BORDEN SUBSTATION STRUCTURE S10A & S10B 3 OF 3	Stantec
S-4013		B	PLAN AND SECTIONS BORDEN SUBSTATION STRUCTURE S11	Stantec

Drawing No. Sheet No.	Client Drawing No.	Rev. No.	Drawing Title	Drawing By
S-4052		B	PLAN, SECTIONS AND DETAIL BORDEN SUBSTATION FOUNDATION F02A AND F02B	Stantec
S-4053		B	PLAN, SECTIONS AND DETAIL BORDEN SUBSTATION FOUNDATION F03	Stantec
S-4054		B	PLAN, SECTIONS AND DETAIL BORDEN SUBSTATION FOUNDATION F04	Stantec
S-4055		B	PLAN, SECTIONS AND DETAIL BORDEN SUBSTATION FOUNDATION F05	Stantec
S-4056		B	PLAN, SECTIONS AND DETAIL BORDEN SUBSTATION FOUNDATION F06	Stantec
S-4057		B	PLAN, SECTIONS AND DETAIL BORDEN SUBSTATION FOUNDATION F07	Stantec
S-4058		B	PLAN, SECTIONS AND DETAIL BORDEN SUBSTATION FOUNDATION F08	Stantec
S-4059		B	PLAN, SECTIONS AND DETAIL BORDEN SUBSTATION FOUNDATION F09	Stantec
S-4060		B	PLAN, SECTIONS AND DETAIL BORDEN SUBSTATION FOUNDATION F10	Stantec
S-4061		B	PLAN, SECTIONS AND DETAIL BORDEN SUBSTATION FOUNDATION F11	Stantec

Drawing No. Sheet No.	Client Drawing No.	Rev. No.	Drawing Title	Drawing By
S-4062		B	PLAN, SECTIONS AND DETAIL BORDEN SUBSTATION FOUNDATION F12	Stantec
S-4063		B	PLAN, SECTIONS AND DETAIL BORDEN SUBSTATION FOUNDATION F13	Stantec
S-4064		B	PLAN AND SECTION BORDEN SUBSTATION FOUNDATION F14	Stantec
S-4065		B	PLAN, SECTIONS AND DETAIL BORDEN SUBSTATION FOUNDATION F15	Stantec
S-4101		B	PLAN, SECTIONS AND DETAIL CAPE TORMENTINE RISER STATION STRUCTURE S12	Stantec
S-4102		B	PLAN, SECTIONS AND DETAILS CAPE TORMENTINE RISER STATION STRUCTURE S13	Stantec
S-4103		B	PLAN, SECTIONS AND DETAIL CAPE TORMENTINE RISER STATION STRUCTURE S14	Stantec
S-4104		B	PLAN AND SECTIONS CAPE TORMENTINE RISER STATION STRUCTURE S15	Stantec
S-4105		B	PLAN, SECTIONS AND DETAILS CAPE TORMENTINE RISER STATION STRUCTURE S16	Stantec
S-4106		B	PLAN AND SECTIONS CAPE TORMENTINE RISER STATION STRUCTURE S17 1 OF 2	Stantec

Drawing No. Sheet No.	Client Drawing No.	Rev. No.	Drawing Title	Drawing By
S-4107		B	SECTIONS AND DETAILS CAPE TORMENTINE RISER STATION STRUCTURE S17 2 OF 2	Stantec
S-4108		B	PLAN AND SECTIONS CAPE TORMENTINE RISER STATION STRUCTURE S18 1 OF 3	Stantec
S-4109		B	SECTIONS AND DETAILS CAPE TORMENTINE RISER STATION STRUCTURE S18 2 OF 3	Stantec
S-4110		B	SECTIONS AND DETAILS CAPE TORMENTINE RISER STATION STRUCTURE S18 3 OF 3	Stantec
S-4151		B	PLAN, SECTIONS AND DETAIL CAPE TORMENTINE RISER STATION FOUNDATION F16	Stantec
S-4152		B	PLAN, SECTIONS AND DETAIL CAPE TORMENTINE RISER STATION FOUNDATION F17	Stantec
S-4153		B	PLAN, SECTIONS AND DETAIL CAPE TORMENTINE RISER STATION FOUNDATION F18	Stantec
S-4154		B	PLAN, SECTIONS AND DETAIL CAPE TORMENTINE RISER STATION FOUNDATION F19	Stantec
S-4155		B	PLAN, SECTIONS AND DETAIL CAPE TORMENTINE RISER STATION FOUNDATION F20	Stantec
S-4156		B	PLAN, SECTIONS AND DETAIL CAPE TORMENTINE RISER STATION FOUNDATION F21	Stantec

Drawing No. Sheet No.	Client Drawing No.	Rev. No.	Drawing Title	Drawing By
S-4157		B	PLAN, SECTIONS AND DETAIL CAPE TORMENTINE RISER STATION FOUNDATION F22	Stantec
S-4158		B	PLAN AND SECTION CAPE TORMENTINE RISER STATION FOUNDATION F18	Stantec
S-4159		B	PLAN LAYOUT CAPE TORMENTINE RISER STATION CONTROL BUILDING	Stantec
S-5001		B	TYPICAL DETAILS AND STEEL NOTES BORDEN SUBSTATION AND CAPE TORMENTINE RISER STATION	Stantec
S-5051		B	TYPICAL CONCRETE DETAILS AND NOTES BORDEN SUBSTATION AND CAPE TORMENTINE RISER STATION	Stantec
S-5101		B	TYPICAL ELEVATIONS CAPE TORMENTINE RISER STATION CONTROL BUILDING	Stantec
S-5102		B	TYPICAL DETAILS CAPE TORMENTINE RISER STATION CONTROL BUILDING	Stantec

APPENDIX II

FENCING STANDARD DETAILS

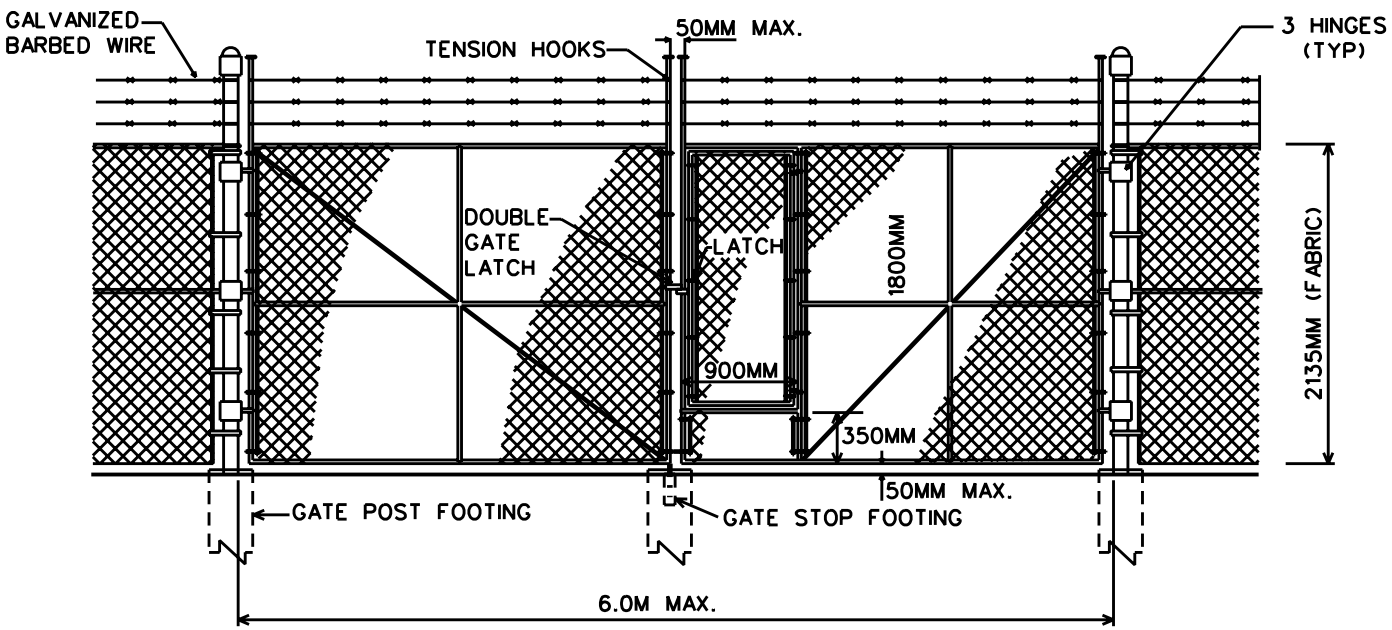

VEHICLE GATE WITH PERSONNEL GATE

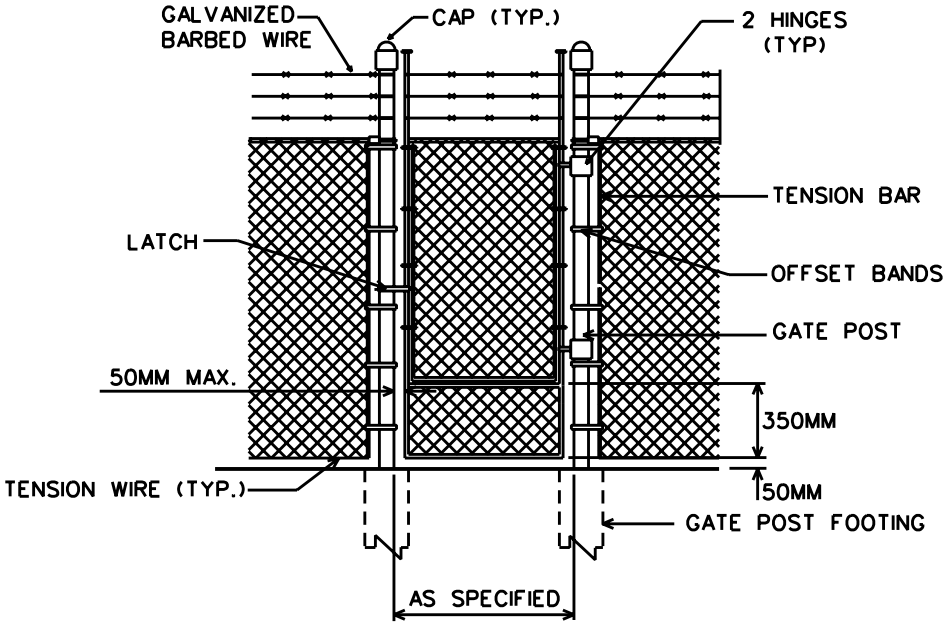

SINGLE PERSONNEL GATE

NOTE: FOR FOOTING DETAILS
SEE DWGS. E-89-39 & E-89-41

MARITIME ELECTRIC
A FORTIS COMPANY

MARITIME ELECTRIC COMPANY, LIMITED

SCALE : N.T.S. DRAWN : J.E.B. CHECKED : APPROVED:	VEHICLE GATE WITH PERSONNEL GATE SINGLE PERSONNEL GATE	DATE : DEC. 13, '89 REVISED : JULY 13, '01 DWG. No. : E-89-36

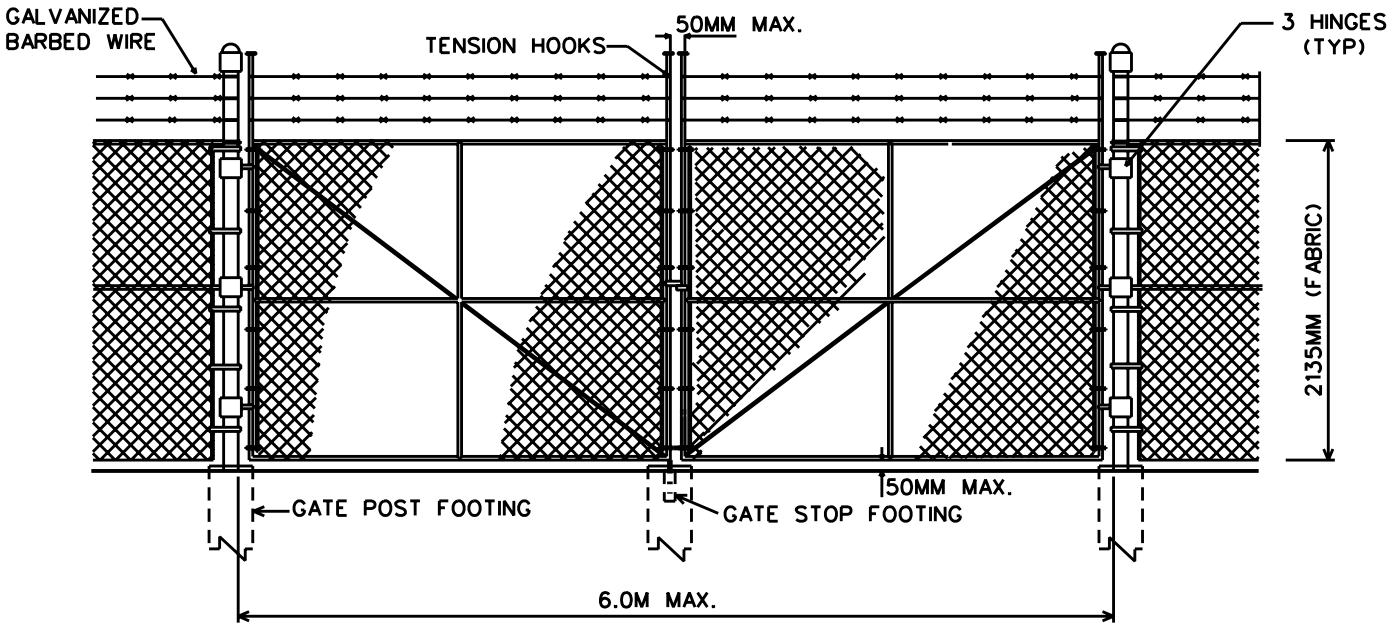

VEHICLE GATE

NOTE: FOR FOOTING DETAILS
SEE DWGS. E-89-39 & E-89-41

MARITIME ELECTRIC
A FORTIS COMPANY

MARITIME ELECTRIC COMPANY, LIMITED

SCALE : N.T.S. DRAWN : J.E.B. CHECKED : APPROVED:	VEHICLE GATE	DATE : JUNE 06, '00 REVISED : DWG. No. : E-89-36A

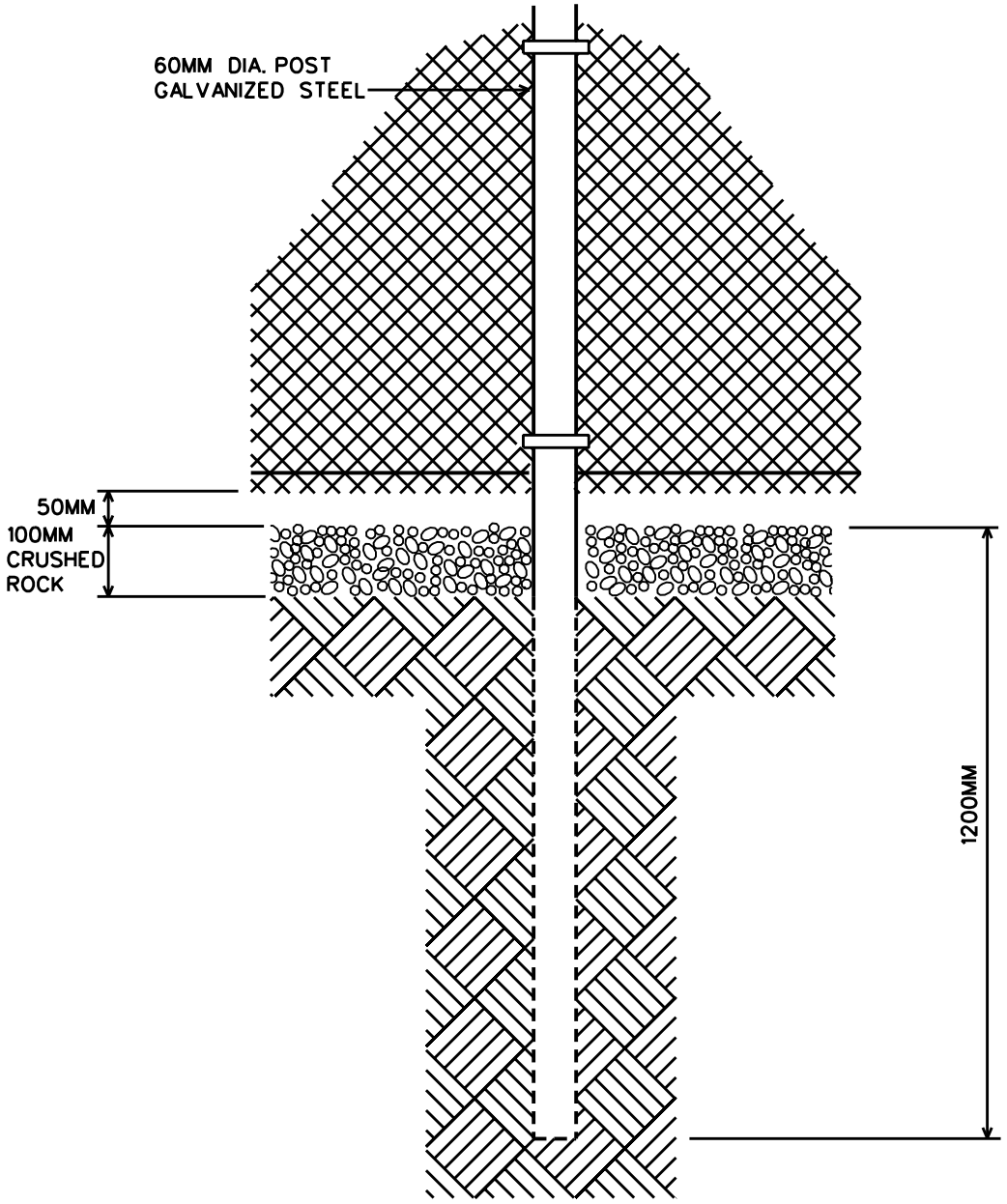

MARITIME ELECTRIC
A FORTIS COMPANY

MARITIME ELECTRIC COMPANY, LIMITED

SCALE : N.T.S.
DRAWN : J.E.B.
CHECKED :
APPROVED:

DRIVEN - LINE POST FOOTING DETAIL

DATE : JAN. 15, '91
REVISED : JUNE 18, 98
DWG. No. : E-89-40

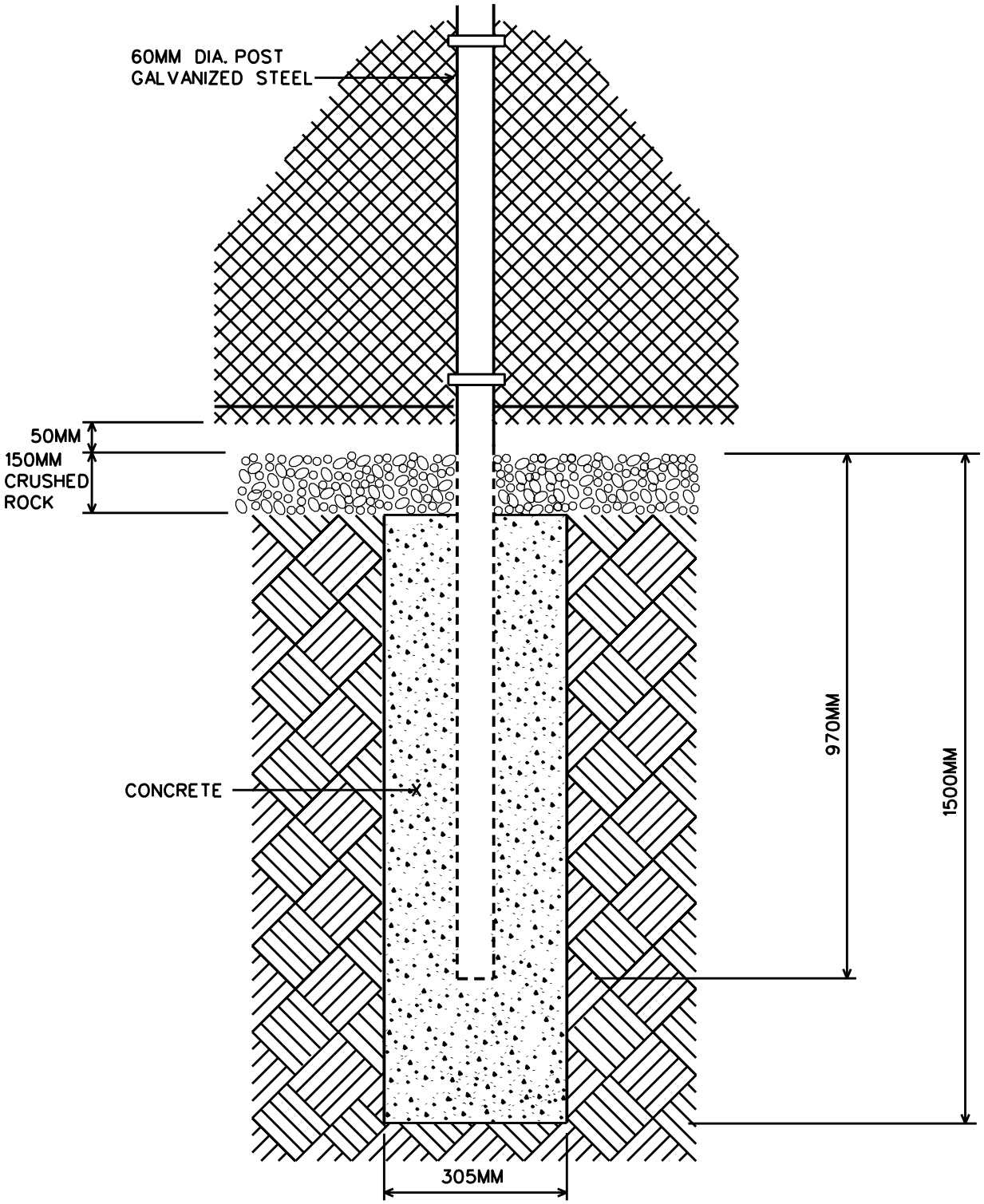

MARITIME ELECTRIC
A FORTIS COMPANY

MARITIME ELECTRIC COMPANY, LIMITED

SCALE : N.T.S. DRAWN : J.E.B. CHECKED : N.W. APPROVED:	LINE POST IN CONCRETE FOOTING DETAIL	DATE : JAN. 15, '91 REVISED : SEPT. 29, 2011 DWG. No. : E-89-40A

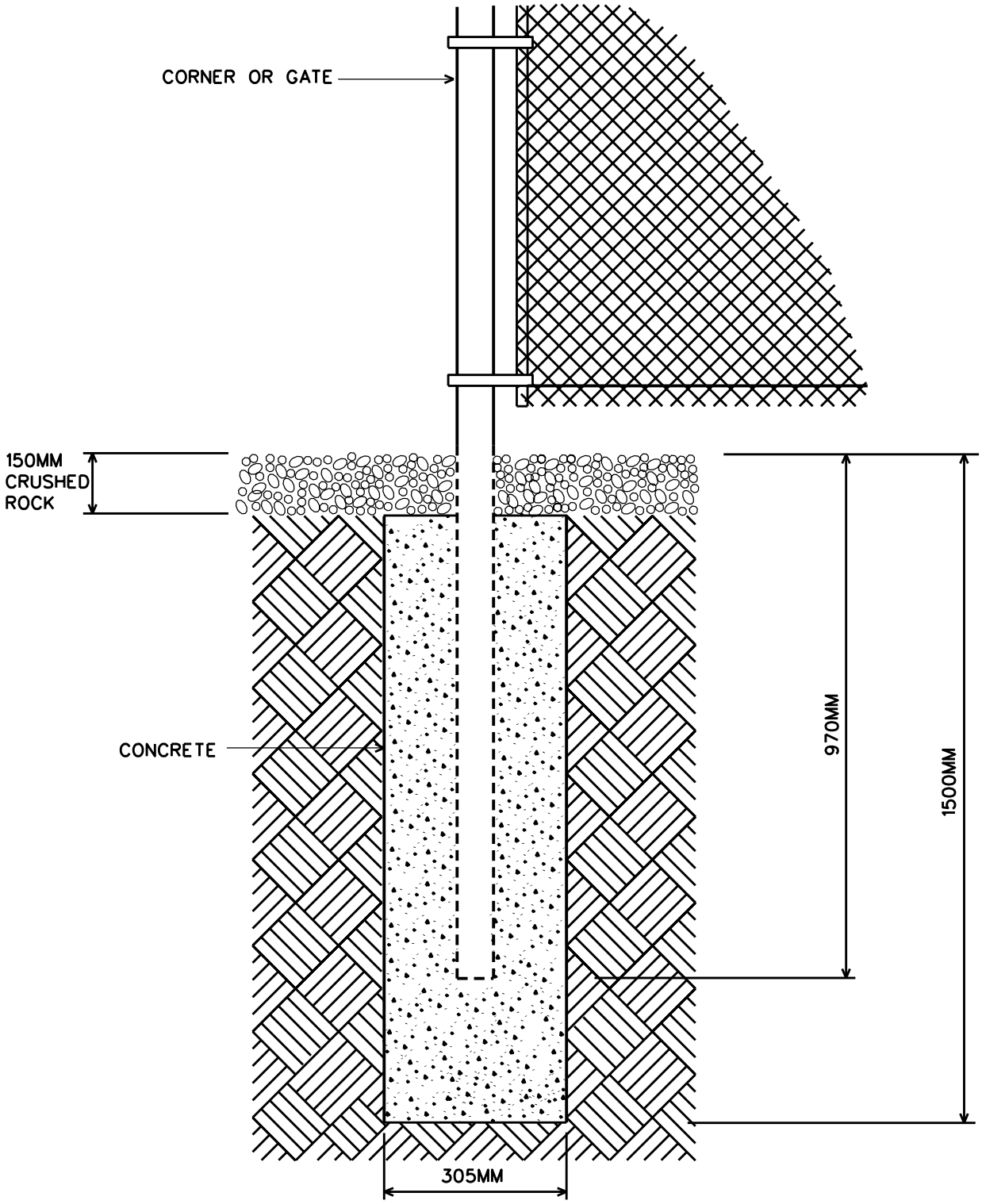

MARITIME ELECTRIC
A FORTIS COMPANY

MARITIME ELECTRIC COMPANY, LIMITED

SCALE : N.T.S.
DRAWN : J.E.B.
CHECKED :
APPROVED:

END, GATE & CORNER POST FOOTING DETAIL

DATE : JAN. 15, '91
REVISED : SEPT. 15, 2011
DWG. No. : E-89-41

APPENDIX III

TENDER SUBMISSION FORM

1. OFFER

_____

(Tenderer)

with Head Office at .....

_____

_____

hereby offers to do the Work in accordance with the Tender Documents, including this Tender Submission and accompanying material for:

MARITIME ELECTRIC COMPANY LTD

BORDEN SUBSTATION AND CAPE TORMENTINE

RISER STATION CONSTRUCTION

TENDER DOCUMENT NO. 2016-18

for the pricing arrangement in Subsection 2 of this Tender Submission.

2. PRICING ARRANGEMENT

2.1 Arrangement

2.1.1 The Contractor agrees to execute the Work as a Fixed Price Arrangement for the total Contract Price of:

_____

_____ Dollars and

_____ Cents ($).

NOTES TO TENDERER: Write out the Total Tender Price in words on the dashed lines provided above.
All pricing in Canadian Funds.

2.2 **Fixed Price Breakdown**

The following is a breakdown of the Total Tender Price for the Work in accordance with the Instructions to Tenderers and is based on the Work included in each referenced division and section of the specification. The breakdown accurately represents the material and installation content of each item. Scope that does not fit into any of these sections shall be added to the bottom of the list.

Item	Specification Sect. or Div.	Description	Permanent Materials ($)	Installation ($)	Total ($)	Trade Labour Hours
1.	Division 1 (Remainder)	Contract Management and Controls				
2.	Division 1, Sect. 010090	Commissioning				
3.	Division 1, Sect. 010005, 1.3.2.3	Cape Tormentine PCT Building				
4.	Division 3	Foundations				
5.	Division 5	Structural Steel				
6.	Division 26, Sect. 2600010	Grounding				
7.	Division 26, Sect. 260015	Lightning Protection				
8.	Division 26, Sect. 260020	Substation Lighting				

Item	Specification Sect. or Div.	Description	Permanent Materials ($)	Installation ($)	Total ($)	Trade Labour Hours
9.	Division 26, Sect. 260030	Cable Trenches and Conduits				
10.	Division 26, Sect. 260035	High Voltage Buswork & Insulators				
11.	Division 26, Sect. 260040	High Voltage Power Cables				
12.	Division 26, Sect. 260045	Low Voltage Power Cables				
13.	Division 26, Sect. 260050	Control Cables				
14.	Division 26, Sect. 260055	Fiber Optic Cables				
15.	Division 26, Sect. 260075	138kV Circuit Breakers				
16.	Division 26, Sect. 260080	138kV Reactor Circuit Switchers				
17.	Division 26, Sect. 260085	138kV Disconnect Switches				
18.	Division 26, Sect. 260090	138kV Potential and Current Transformers				

Item	Specification Sect. or Div.	Description	Permanent Materials ($)	Installation ($)	Total ($)	Trade Labour Hours
19.	Division 26, Sect. 260095	138kV Reactors				
20.	Division 26, Sect. 261000	Construction Check-Out				
21.	Division 26, Sect. 261005	Cape Tormentine PCT Building Electrical				
22.	Division 31, Sect. 310010	Earthwork and Site Grading				
23.	Division 31, Sect. 313529	Secondary Containment Systems				
24.	Division 32, Sect. 323113	Chain Link Fences and Gates				
25.	Division 33, Sect. 334100	Culverts				
26.						
27.						
28.						
29.						

Item	Specification Sect. or Div.	Description	Permanent Materials ($)	Installation ($)	Total ($)	Trade Labour Hours
30.						
31.						
32.						
		TOTALS				
			TOTAL TENDER PRICE			

3. PAYMENT SCHEDULE

A proposed payment schedule in accordance with the Instructions to Tenderer shall be included with the Tender.

4. SUBCONTRACTORS

We propose to use the following Subcontractors for the activities listed. This list is submitted in accordance with the Instructions to Tenderer.

Activity and Scope	Subcontractor

5. CONSTRUCTION EQUIPMENT SCHEDULE

We propose to use the following equipment in the execution of the Work. (The Tenderer shall state the name of the Owner of any equipment, if any, that it intends to rent). This schedule is submitted in accordance with the Instructions to Tenderer.

Description	Owner

6. SUMMARY SCHEDULE

A summary schedule in accordance with Section 010050, Subsection 1 and the Instructions to Tenderers shall be submitted with the tender.

7. MANAGEMENT, SUPERVISORY AND SAFETY PERSONNEL RESUMES

Resumes of management, supervisory and safety personnel shall be submitted with the tender.

8. QUALIFICATIONS AND PREVIOUS EXPERIENCE

A qualifications package and previous project experience in accordance with the Instructions to Tenderers shall be submitted with the tender.

9. INSURANCE

This information is submitted in accordance with the Instructions to Tenderer.

(a) Liability Insurance

The name and address of the Contractor's insurance agent is:

_____

_____

_____

Insurance Amount: _____

Policy Number: _____

Expiry Date: _____

(b) Automobile Insurance

The name and address of the Contractor's insurance agent is:

_____

_____

_____

Insurance Amount: _____

Policy Number: _____

Expiry Date: _____

10. WORKPLACE HEALTH, SAFETY AND COMPENSATION COMMISSION INFORMATION

Workplace Health, Safety and Compensation Commission information in accordance with the Instructions to Tenderers shall be submitted with the tender.

11. SAFETY POLICY

Safety policy information complete with historical safety statistics in accordance with the Instructions to Tenderers shall be submitted with the tender.

12. ADDITIONAL INFORMATION

Additional information as outlined in the tender document and the Instructions to Tenderer shall be submitted with the tender.

13. ADDENDUM

Tenderers shall identify all addenda which have been received and confirm acceptance to all items specified in the addenda.

Addendum No.	Date	Description	Acceptance

13. SIGNATURES

TENDER SUBMITTED BY:

Name of Tenderer

Address of Tenderer

Witness to Signature

Authorized Signature

Typed Name of Signatory

Title

Date of Signing

Telephone Number

FAX Number

(THIS TENDER IS TO BE SUBMITTED IN DUPLICATE AS ONE ORIGINAL AND ONE COPY)

APPENDIX IV

GEOTECHNICAL REPORT

Subsurface Investigation – Borden Substation and Cape Tormentine Riser Station

Job No. 133546898
Geotechnical Report

Prepared for:
Maritime Electric Company Limited
PO Box 1328
180 Kent Street
Charlottetown PE C1A 7N2

Prepared by:
Stantec Consulting Ltd.
845 Prospect Street
Fredericton NB E3B 2T7

January 19, 2016

Sign-off Sheet

This document entitled Subsurface Investigation – Borden Substation and Cape Tormentine Riser Station was prepared by Stantec Consulting Ltd. ("Stantec") for the account of Maritime Electric Company Limited (the "Client"). Any reliance on this document by any third party is strictly prohibited. The material in it reflects Stantec's professional judgment in light of the scope, schedule and other limitations stated in the document and in the contract between Stantec and the Client. The opinions in the document are based on conditions and information existing at the time the document was published and do not take into account any subsequent changes. In preparing the document, Stantec did not verify information supplied to it by others. Any use which a third party makes of this document is the responsibility of such third party. Such third party agrees that Stantec shall not be responsible for costs or damages of any kind, if any, suffered by it or any other third party as a result of decisions made or actions taken based on this document.

Prepared by _____
(signature)

Brandon Love, B. Sc. Eng.
Geotechnical Engineer in Training

Reviewed by _____
(signature)

Jeffrey Barrett, M. Sc. E., P.Eng.
Associate, Geotechnical Engineer

Reviewed by _____
(signature)

Mark Macdonald, P.Eng.
Associate, Geotechnical Engineer

REGISTERED PROFESSIONAL ENGINEER
Province of New Brunswick
M6890
Jeffrey C. Barrett
Signature
April 1/2016
Date
Province du Nouveau-Brunswick
INGÉNIEUR IMMATRICULÉ

PROFESSIONAL ENGINEER
The Association Of Professional Engineers Of The Province Of Prince Edward Island
Mark L. MacDonald
1224
April 1, 2016
Date
PROVINCE OF PRINCE EDWARD ISLAND

Stantec

Table of Contents

1.0 INTRODUCTION 1.1

2.0 METHODOLOGY 2.2
2.1 DRILLING PROGRAM 2.2
2.2 LABORATORY TESTING 2.2
2.3 SITE SURVEY 2.3

3.0 SUBSURFACE CONDITIONS 3.4
3.1 ROOTMAT/TOPSOIL 3.4
3.2 GLACIAL TILL 3.4
3.3 BEDROCK 3.5
3.4 GROUNDWATER 3.5

4.0 DISCUSSIONS AND RECOMMENDATIONS 4.6
4.1 GENERAL 4.6
4.2 SITE PREPARATION 4.6
4.3 FOUNDATION 4.7
4.4 FROST DEPTH 4.7
4.5 CONSTRUCTION CONSIDERATIONS 4.8
4.5.1 General 4.8
4.5.2 Temporary Slopes 4.8
4.5.3 Field Inspection 4.8
4.5.4 Winter Construction 4.9
4.6 SEISMIC SITE CLASSIFICATION 4.9

5.0 CLOSURE 5.10

6.0 REFERENCES 6.1

LIST OF TABLES

Table 2-1 Investigation Location Summary 2.3
Table 3-1 Summary of Subsurface Conditions 3.4
Table 3-2 Glacial Till Gradation and Moisture Content Analysis 3.5
Table 4-1 - Geotechnical Bearing Resistances 4.7

LIST OF APPENDICES

APPENDIX A A.1

APPENDIX B B.2

APPENDIX C C.3

APPENDIX D D.4

1.0 INTRODUCTION

This geotechnical report includes the results of the subsurface investigation carried out for the above-noted project. The purpose of this investigation was to gather subsurface information for input into the design pertaining to the installation of the proposed substation in Borden, Prince Edward Island (PE) and riser station in Cape Tormentine, New Brunswick (NB). The geotechnical investigation included drilling a total of six (6) boreholes in specified areas over the two sites.

Previous to this investigation Stantec investigated eight (8) boreholes drilled in total between both sites listed above, the borehole locations, including the previously drilled holes from Job No. 121811475 – File 3627 (Stantec, 2014), are shown in the Borehole Location Plans (Drawings No. 1 and 2, Appendix B). This report summarizes the findings of the investigation and presents interpretation of the data collected.

2.0 METHODOLOGY

The field investigation for the substations was completed as part of the site investigation from December 22nd to December 23rd, 2015. The geotechnical investigation included the following:

- Advancing four (4) vertical boreholes with 100 mm diameter flight auger drilling equipment on the Borden, PE site (BH-01 to BH-04);
- Advancing two (2) vertical boreholes with 100 mm diameter flight auger drilling equipment equipment on the Cape Tormentine, NB site (BH-05 and BH-06); and,
- Classification and index testing of retrieved overburden samples.

2.1 DRILLING PROGRAM

Logan Geotech Inc. (Logan) of Stewiacke, Nova Scotia completed the drilling using a CME 55 truck-mounted drill. All boreholes were advanced using standard auger drilling techniques until inferred bedrock was encountered and/or target depth was reached. Overburden soils were sampled at continuous intervals using Standard Penetration Test (SPT) methods with a 50 mm outside diameter (OD) split spoon sampler. In some cases, auger drilling techniques were used to advance the borehole into the inferred bedrock interface until the target depth was reached.

Soil samples were transported to Stantec's Charlottetown, PE laboratory for further classification and testing.

Boreholes (BH-01 to BH-06) were drilled to depths ranging from 5.4 m to 6.1 m below existing ground surface. Borehole locations are shown on Drawings No. 1 and 2, in Appendix B. Drilling activities were supervised by Stantec field personnel who collected soil samples and logged subsurface conditions at continuous borehole sampling intervals.

2.2 LABORATORY TESTING

All soil samples recovered from the drilling program were stored in moisture tight containers and returned to our Charlottetown laboratory for detailed classification and testing. Laboratory testing was performed on select samples, including:

- Natural moisture content determinations, and
- Grain size distributions (sieve analysis).

The results of the laboratory testing are provided on the Borehole Records in Appendix C, and/or discussed in the text of this report. Samples remaining after testing will be stored for a period of

three (3) months after issuance of this report. Samples will be discarded after this period unless otherwise directed.

2.3 SITE SURVEY

The borehole locations were decided upon prior to the investigation and laid out in the field by handheld GPS. Approximate borehole coordinates of each location are provided in Table 2-1 and are shown on Drawings No. 1 and 2 in Appendix B.

Table 2-1 Investigation Location Summary

ID	Northing (m)	Easting (m)
BH-01	5121979	446805
BH-02	5121920	446749
BH-03	5121864	446806
BH-04	5121919	446863
BH-05	5108171	439251
BH-06	510817	439259

*Note: All coordinates listed in the above table are in UTM Zone 20T.

3.0 SUBSURFACE CONDITIONS

The subsurface conditions generally consisted of a surficial layer of rootmat and topsoil overlying a glacial till layer and bedrock layer. The subsurface conditions are summarized on Table 3-1 Summary of Subsurface Conditions, the Borehole Records in Appendix C, and are discussed in the following subsections.

Table 3-1 Summary of Subsurface Conditions

BH ID	Rootmat/Topsoil Thickness (m)	Glacial Till Thickness (m)	Suggest Depth Drilled in Inferred Bedrock (m)	Total Depth of Exploration (m)	Groundwater Depth (m)
BH-01	0.1	4.5	0.6	5.2	2.4
BH-02	0.1	6.0	--	6.1	--
BH-03	0.1	6.0	--	6.1	2.1
BH-04	0.1	5.6	0.4	6.1	1.8
BH-05	0.1	5.0	1.0	6.1	2.1
BH-06	0.1	5.7	0.3	6.1	2.1

3.1 ROOTMAT/TOPSOIL

A surficial layer of rootmat/topsoil was encountered at all borehole locations. This layer is generally described as vegetation, roots, moss, organic matter, and topsoil. This layer was consistently found to be approximately 0.1 m thick.

3.2 GLACIAL TILL

Glacial Till was encountered in each borehole during the investigation. The glacial till composition varied across the site and included clayey sand (SC) with trace to some gravel to

sandy silty clay (CL-ML) with trace to some gravel. The glacial till was generally reddish brown in colour. The thickness of the glacial till deposit ranged from 4.5 m to 6.0 m. It should be noted that glacial till can be a heterogeneous mixture of soil sizes ranging from clay to silt to sand to gravel to cobbles and boulders. The portions of the various soil sizes can vary widely in the till deposit.

N-values from SPT performed within the till stratum indicate a loose to very dense compactness, however; the compactness generally ranged from loose to compact. Moisture content determinations ranged from 12.4 to 20.6 percent. Table 3-2 summarizes the gradation and moisture content analysis performed on the glacial till samples. Detailed results are also included in Appendix C – Laboratory Testing.

In Stantec's "Subsurface Investigation for PEI-NB Electrical Cable Interconnection" report, Atterberg Limit Tests concluded the till contained fines of low plasticity based on average liquid and plastic limits of 22 percent and 13 percent, respectively (Stantec, 2014).

Table 3-2 Glacial Till Gradation and Moisture Content Analysis

BH ID, Sample ID	Start Depth (m)	Gravel (%)	Sand (%)	Silt/Clay (%)	Moisture Content (%)	Classification
BH-02, SS 5	2.4	6.3	50.4	43.3	15.0	clayey sand (SC) TILL
BH-04, SS 3	1.2	12	57	31	20.6	clayey sand (SC) TILL
BH-06, SS 8	4.3	9	40	51	12.4	sandy silty clay (CL-ML) TILL

3.3 BEDROCK

Bedrock was inferred in each borehole with the exception of BH-02 and BH-03. The approximate depth ranged from 4.6 m to 5.8 m below existing ground surface. The inferred bedrock was generally classified as a red-brown, sandstone sedimentary deposit. The bedrock was inferred in boreholes by flight auger drilling into the layer.

3.4 GROUNDWATER

The groundwater table was encountered in each borehole with the exception of BH-02. The groundwater ranged in depth from 1.8 m to 2.4 m below existing ground surface. Fluctuations of the groundwater table can occur as a result of seasonal variations and/or in response to significant weather events.

4.0 DISCUSSIONS AND RECOMMENDATIONS

4.1 GENERAL

At the time of investigation, it is understood that the Client is expanding the existing substation in Borden, PE and planning to build a new riser station in Cape Tormentine, NB. The locations of the boreholes in these specified areas are shown on Drawings No. 1 and 2 in Appendix B. At the time of writing this report, final design grades were not confirmed, and will be assumed to be at, or near, the current grade.

Based on the current conditions encountered at the borehole locations, development of the site for use of spread footing foundations for buildings is considered feasible. The following recommendations are provided to assist with the geotechnical design for the proposed project.

4.2 SITE PREPARATION

It is recommended that the existing topsoil, rootmat, and any other deleterious materials encountered be removed to native undisturbed till within the stress zone of influence of the foundations loads. The stress zone of influence is the foundation footprint plus a horizontal distance beyond the footprint equal to the depth of excavation below the perimeter foundation footing level (i.e. 1 Horizontal: 1 Vertical downward splay from the footings) to encounter till or bedrock.

Following removal of unsuitable materials, the base of the excavated areas should be proof-rolled with a 10-tonne (minimum) vibratory drum roller. Areas with excessive yielding should be over-excavated and replaced with compacted structural fill.

Structural fill should be placed and compacted to achieve required design elevations. Structural fill should consist of approved inorganic well-graded soil with a maximum particle size of 125 mm and maintained at a suitable moisture content to achieve the specified compaction. Excavated till will soften readily if exposed to moisture and should only be considered for use as a structural fill during summer months. Excavated site soils should be properly stockpiled to maintain moisture content within a suitable range to achieve the specified compaction.

Structural fill placed within the building zone of influence should be compacted to a minimum 100% of the material's corrected maximum dry density as determined in accordance with ASTM D698 (Standard Proctor). The lift thickness used during placement and compaction of structural fill must be compatible with the compaction equipment used, not to exceed 300 mm in loose thickness, to ensure that the required density is achieved throughout. Fill compaction should be verified by means of field testing.

Bearing surfaces should be inspected by qualified geotechnical personnel prior to construction or placement of the foundation.

4.3 FOUNDATION

Based on our findings and the site preparations noted above, the building structures can be founded on structural fill placed over undisturbed native till. The two sites have separate factored geotechnical bearing resistances at ultimate limit states (ULS) and are listed below.

Table 4-1 - Geotechnical Bearing Resistances

Location	Geotechnical Resistance Factor*	Geotechnical Bearing Resistance at Ultimate Limit State, ULS (kPa)
Cape Tormentine, NB	0.5	225
Borden, PE	0.5	200

*Geotechnical Resistance Factor of 0.5 (National Building Code of Canada, 2010)

Foundation slabs should be constructed on a layer of free-draining material (such as one inch clear stone) to provide drainage and uniform bedding placed on native undisturbed till or approved structural fill. The specific required material and thickness of bedding will be dependent on under slab components, however, a minimum thickness of 300 mm is recommended. Prior to placement of the bedding material, the subgrade should be proof-rolled with a vibratory roller and soft spots identified during the proof-rolling process, should be over-excavated and replaced with approved and compacted structural fill. A sub-grade modulus (k) of 20 MPa/m for native till and 50 MPa/m for structural fill can be used (based on the 750 mm diameter plate test) for slab design.

4.4 FROST DEPTH

All exterior and interior building footings and footings where the building is unheated should be minimum 1.8 m below final grade for frost protection. The frost front should not be permitted to migrate below the footings.

Equivalent insulation may be used in place of soil cover for frost protection, depending on the final design requirements. The insulation should extend laterally from the protected footings 1.8 m and minimum 300 mm of soil cover over the insulation.

4.5 CONSTRUCTION CONSIDERATIONS

4.5.1 General

The site soils have a fine-grained composition and are easily degraded by wet conditions and construction traffic. The following provides general geotechnical comments to assist in planning and construction.

- Grading of site till subgrades should be undertaken during dry conditions and should be temporarily delayed during precipitation events to minimize degradation of the site soils.
- Surfaces of native till subgrades or of till placed as fill should be sealed by rolling prior at the end of the shift to avoid degradation of soils.
- Soft or spongy areas should be over excavated and replaced with structural fill.
- Surface water should be directed away from excavations.
- Traffic on native till subgrades or till fill lifts should be minimized to extend practical use and/or haul roads should be considered.

4.5.2 Temporary Slopes

Short term excavation slopes within fill and till layers should be maintained at 2.5H:1V. Safe excavation slopes are the responsibility of the earthworks contractor. As a minimum, temporary excavations must be sloped in accordance with the applicable New Brunswick and Prince Edward Island Occupational Health and Safety Guidelines. If an excavation cannot be properly sloped or benched, the contractor should install an engineered shoring system to safely support the temporary excavation.

Excavation slopes should be checked regularly for signs of instability and flattened as required. Temporary slopes should be protected from surface-runoff erosion by means of berms and swales located along the top of the slope and by means of plastic sheeting placed over the slope. Soil stockpiles should not be located within 1.5 times the height of the excavation depth to avoid surcharging the excavation walls.

4.5.3 Field Inspection

It is recommended that inspection by experienced geotechnical personnel be carried out during site preparation to ensure that unsuitable materials are removed; only suitable materials are used such as structural fill, and materials placed are compacted to the required density.

4.5.4 Winter Construction

Should construction be completed during the winter months, care should be taken to ensure that bearing soils remain free of frost penetration prior to, and following, the placement of the foundation subgrade.

Excavations and exposed subgrade should be maintained in a dry and unfrozen condition throughout construction. Soils that become disturbed/softened during construction should be over-excavated and replaced with structural fill as described herein.

4.6 SEISMIC SITE CLASSIFICATION

Based on the findings at the borehole locations, the site classification for seismic site response in accordance with Clause 4.1.8.4 of the NBCC 2010 is Seismic Site Class E.

Site Class	Ground Profile Name	Average Properties in Top 30 m		
		Average Shear Wave Velocity, V_s (m/s)	Average Standard Penetration Resistance, N_{60}	Soil Undrained Shear Strength, S_u (kPa)
E	Soft soil	$V_s < 180$	$N_{60} < 15$	$S_u < 50$

Note: Reference from Table 4.1.8.4A, National Building Code of Canada, 2010

5.0 CLOSURE

Use of this report is subject to the Statement of General Conditions included in Appendix A. It is the responsibility of Maritime Electric Company Ltd., who is identified as "the client" within the Statement of General Terms and Conditions, and its agents to review the conditions and to notify Stantec Consulting Ltd. should any of these not be satisfied. The Statement of General Conditions addresses the following:

- Use of the report
- Basis of the report
- Standard of care
- Interpretation of site conditions
- Varying or unexpected site conditions
- Planning, design, or construction

This report was prepared by Brandon Love, E.I.T., and reviewed by Jeffrey Barrett, M.Sc.E., P.Eng. and Mark Macdonald, P.Eng. We trust that the information contained in this report is adequate for your present purposes. If you have any questions about the contents of the report or if we can be of any other assistance please contact us at your convenience.

6.0 REFERENCES

Zafiris, G. 2014. Stantec Subsurface Investigation, PEI-NB Electrical Cable Interconnection. Borden-Carleton, PEI and Cape Tormentine, NB. Job No. 121811475 File No. 3627.

Appendix A

Statement of General Conditions

STATEMENT OF GENERAL CONDITIONS

USE OF THIS REPORT: This report has been prepared for the sole benefit of the Client or its agent and may not be used by any third party without the express written consent of Stantec Consulting Ltd. and the Client. Any use which a third party makes of this report is the responsibility of such third party.

BASIS OF THE REPORT: The information, opinions, and/or recommendations made in this report are in accordance with Stantec Consulting Ltd.'s present understanding of the site specific project as described by the Client. The applicability of these is restricted to the site conditions encountered at the time of the investigation or study. If the proposed site specific project differs or is modified from what is described in this report or if the site conditions are altered, this report is no longer valid unless Stantec Consulting Ltd. is requested by the Client to review and revise the report to reflect the differing or modified project specifics and/or the altered site conditions.

STANDARD OF CARE: Preparation of this report, and all associated work, was carried out in accordance with the normally accepted standard of care in the state or province of execution for the specific professional service provided to the Client. No other warranty is made.

INTERPRETATION OF SITE CONDITIONS: Soil, rock, or other material descriptions, and statements regarding their condition, made in this report are based on site conditions encountered by Stantec Consulting Ltd. at the time of the work and at the specific testing and/or sampling locations. Classifications and statements of condition have been made in accordance with normally accepted practices which are judgmental in nature; no specific description should be considered exact, but rather reflective of the anticipated material behavior. Extrapolation of in situ conditions can only be made to some limited extent beyond the sampling or test points. The extent depends on variability of the soil, rock and groundwater conditions as influenced by geological processes, construction activity, and site use.

VARYING OR UNEXPECTED CONDITIONS: Should any site or subsurface conditions be encountered that are different from those described in this report or encountered at the test locations, Stantec Consulting Ltd. must be notified immediately to assess if the varying or unexpected conditions are substantial and if reassessments of the report conclusions or recommendations are required. Stantec Consulting Ltd. will not be responsible to any party for damages incurred as a result of failing to notify Stantec Consulting Ltd. that differing site or sub-surface conditions are present upon becoming aware of such conditions.

PLANNING, DESIGN, OR CONSTRUCTION: Development or design plans and specifications should be reviewed by Stantec Consulting Ltd., sufficiently ahead of initiating the next project stage (property acquisition, tender, construction, etc), to confirm that this report completely addresses the elaborated project specifics and that the contents of this report have been properly interpreted. Specialty quality assurance services (field observations and testing) during construction are a necessary part of the evaluation of sub-subsurface conditions and site preparation works. Site work relating to the recommendations included in this report should only be carried out in the presence of a qualified geotechnical engineer; Stantec Consulting Ltd. cannot be responsible for site work carried out without being present.

Appendix B

Drawing No. 1 – Borehole Location Plan (Borden-Carleton, PE)

Drawing No. 2 – Borehole Location Plan (Cape Tormentine, NB)

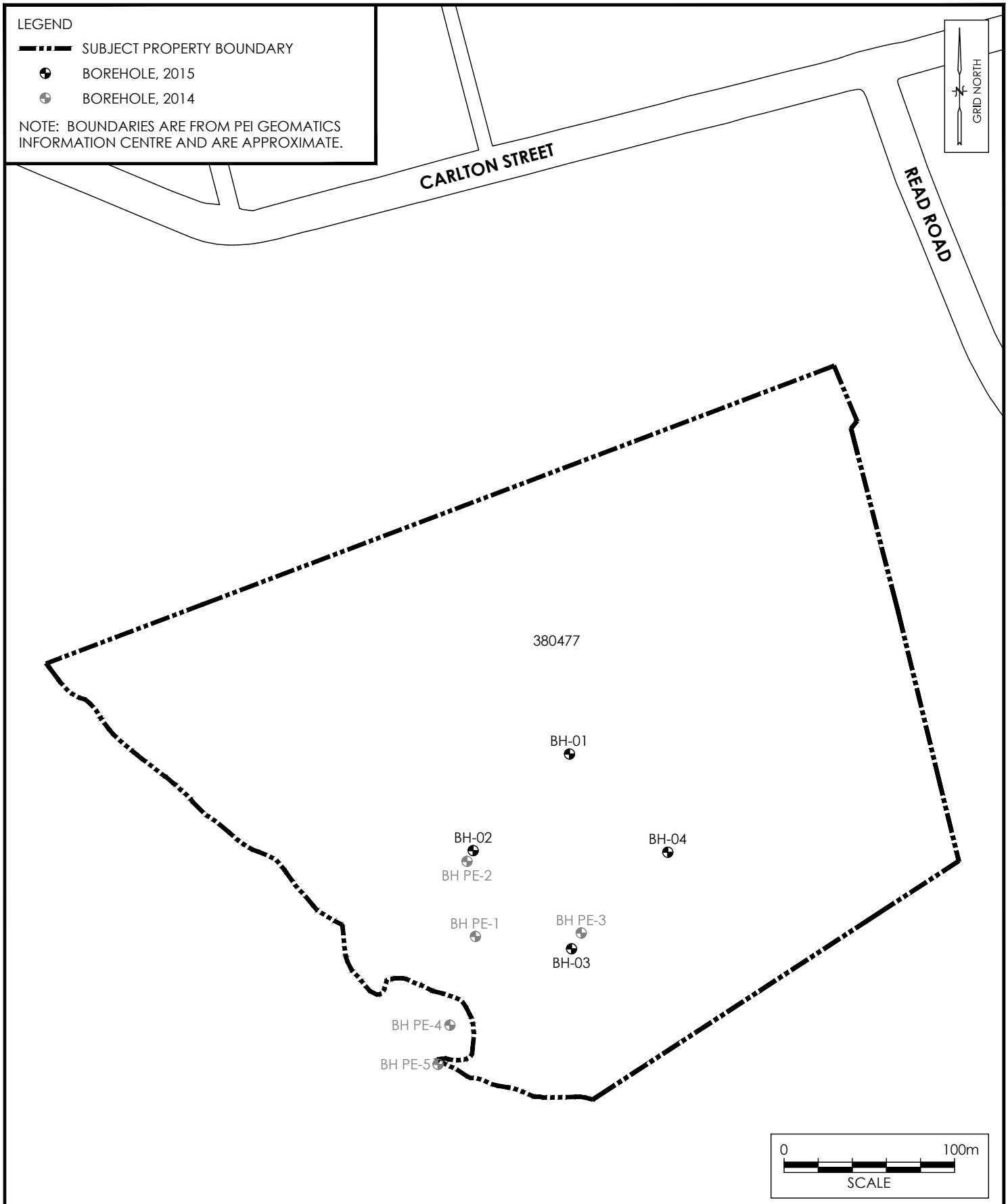

THIS DRAWING ILLUSTRATES SUPPORTING INFORMATION SPECIFIC TO A STANTEC CONSULTING LTD. REPORT AND MUST NOT BE USED FOR OTHER PURPOSES.

BOREHOLE LOCATION PLAN

SUBSURFACE INVESTIGATION
BORDEN SUBSTATION AND CAPE TORMENTINE RISER STATION
BORDEN-CARLETON, PEI

Client: MARITIME ELECTRIC COMPANY

Job No.:	133546898
Scale:	1 : 3000
Date:	19-JAN-2016
Dwn. By:	MA
App'd By:	BL

Dwg. No.: 1

Stantec

V:\1216\active\133546898\Drawings_and_Logs\BH BORDEN.dwg

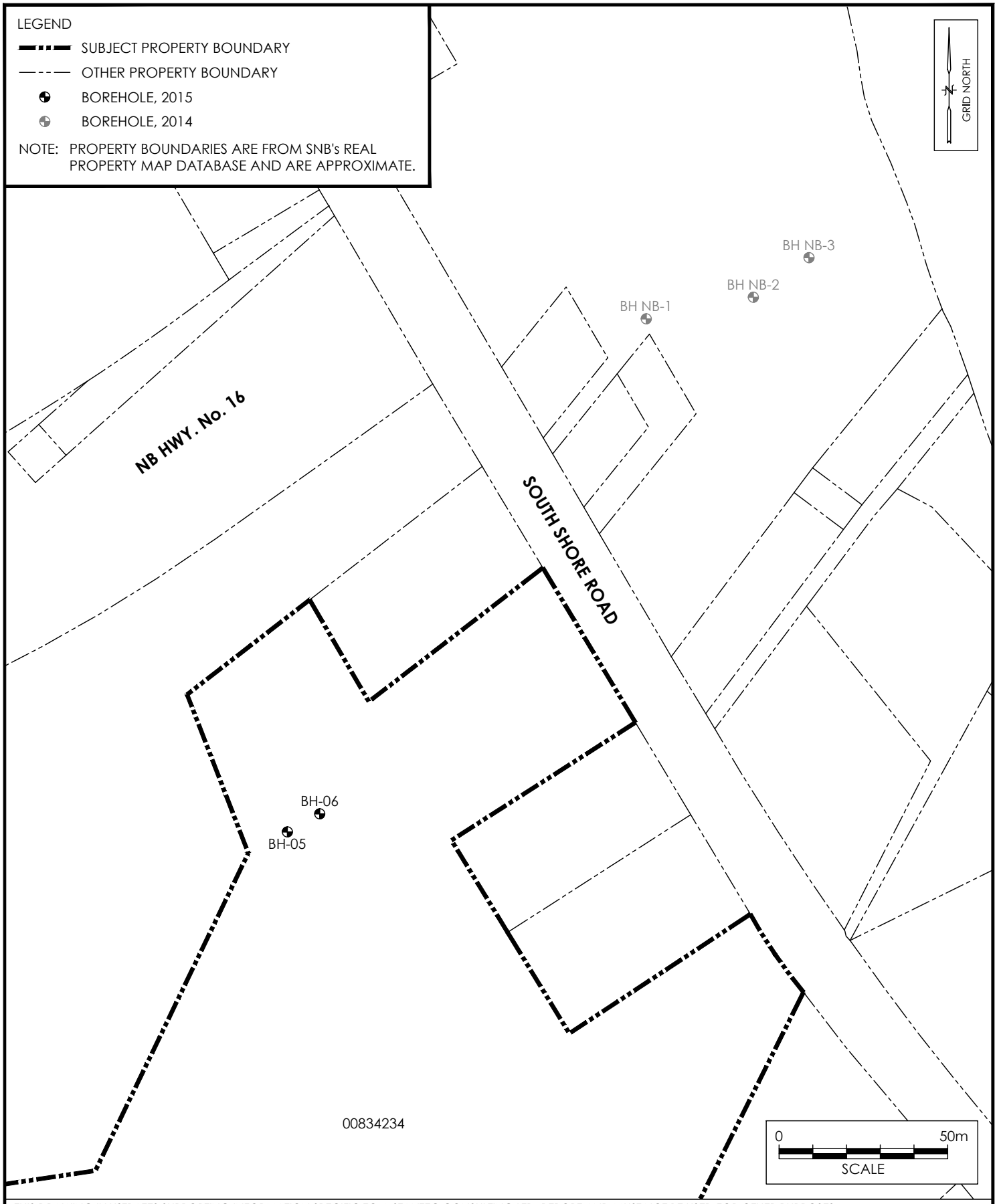

THIS DRAWING ILLUSTRATES SUPPORTING INFORMATION SPECIFIC TO A STANTEC CONSULTING LTD. REPORT AND MUST NOT BE USED FOR OTHER PURPOSES.

BOREHOLE LOCATION PLAN

SUBSURFACE INVESTIGATION
BORDEN SUBSTATION AND CAPE TORMENTINE RISER STATION
CAPE TORMENTINE, NB

Client: MARITIME ELECTRIC COMPANY

Job No.:	133546898
Scale:	1 : 1500
Date:	19-JAN-2016
Dwn. By:	MA
App'd By:	BL

Dwg. No.: 2

Stantec

V:\1216\active\133546898\Drawings_and_Logs\BH CAPE TORMENTINE.dwg

Appendix C

Symbols and Terms Used on Borehole Records and Test Pit Records

Borehole Records

SYMBOLS AND TERMS USED ON BOREHOLE AND TEST PIT RECORDS

SOIL DESCRIPTION

Terminology describing common soil genesis:

Rootmat	- vegetation, roots and moss with organic matter and topsoil typically forming a mattress at the ground surface
Topsoil	- mixture of soil and humus capable of supporting vegetative growth
Peat	- mixture of visible and invisible fragments of decayed organic matter
Till	- unstratified glacial deposit which may range from clay to boulders
Fill	- material below the surface identified as placed by humans (excluding buried services)

Terminology describing soil structure:

Desiccated	- having visible signs of weathering by oxidization of clay minerals, shrinkage cracks, etc.
Fissured	- having cracks, and hence a blocky structure
Varved	- composed of regular alternating layers of silt and clay
Stratified	- composed of alternating successions of different soil types, e.g. silt and sand
Layer	- > 75 mm in thickness
Seam	- 2 mm to 75 mm in thickness
Parting	- < 2 mm in thickness

Terminology describing soil types:
The classification of soil types are made on the basis of grain size and plasticity in accordance with the Unified Soil Classification System (USCS) (ASTM D 2487 or D 2488) which excludes particles larger than 75 mm. For particles larger than 75 mm, and for defining percent clay fraction in hydrometer results, definitions proposed by Canadian Foundation Engineering Manual, 4th Edition are used. The USCS provides a group symbol (e.g. SM) and group name (e.g. silty sand) for identification.

Terminology describing cobbles, boulders, and non-matrix materials (organic matter or debris):
Terminology describing materials outside the USCS, (e.g. particles larger than 75 mm, visible organic matter, and construction debris) is based upon the proportion of these materials present:

Trace, or occasional	Less than 10%
Some	10-20%
Frequent	> 20%

Terminology describing compactness of cohesionless soils:
The standard terminology to describe cohesionless soils includes compactness (formerly "relative density"), as determined by the Standard Penetration Test (SPT) N-Value - also known as N-Index. The SPT N-Value is described further on page 3. A relationship between compactness condition and N-Value is shown in the following table.

Compactness Condition	SPT N-Value
Very Loose	<4
Loose	4-10
Compact	10-30
Dense	30-50
Very Dense	>50

Terminology describing consistency of cohesive soils:
The standard terminology to describe cohesive soils includes the consistency, which is based on undrained shear strength as measured by *in situ* vane tests, penetrometer tests, or unconfined compression tests. Consistency may be crudely estimated from SPT N-Value based on the correlation shown in the following table (Terzaghi and Peck, 1967). The correlation to SPT N-Value is used with caution as it is only very approximate.

Consistency	Undrained Shear Strength		Approximate SPT N-Value
	kips/sq.ft.	kPa	
Very Soft	<0.25	<12.5	<2
Soft	0.25 - 0.5	12.5 - 25	2-4
Firm	0.5 - 1.0	25 - 50	4-8
Stiff	1.0 - 2.0	50 – 100	8-15
Very Stiff	2.0 - 4.0	100 - 200	15-30
Hard	>4.0	>200	>30

ROCK DESCRIPTION

Except where specified below, terminology for describing rock is as defined by the International Society for Rock Mechanics (ISRM) 2007 publication "The Complete ISRM Suggested Methods for Rock Characterization, Testing and Monitoring: 1974-2006"

Terminology describing rock quality:

RQD	Rock Mass Quality
0-25	*Very Poor Quality*
25-50	*Poor Quality*
50-75	*Fair Quality*
75-90	*Good Quality*
90-100	*Excellent Quality*

Alternate (Colloquial) Rock Mass Quality	
Very Severely Fractured	*Crushed*
Severely Fractured	*Shattered or Very Blocky*
Fractured	*Blocky*
Moderately Jointed	*Sound*
Intact	*Very Sound*

RQD (Rock Quality Designation) denotes the percentage of intact and sound rock retrieved from a borehole of any orientation. All pieces of intact and sound rock core equal to or greater than 100 mm (4 in.) long are summed and divided by the total length of the core run. RQD is determined in accordance with ASTM D6032.

SCR (Solid Core Recovery) denotes the percentage of solid core (cylindrical) retrieved from a borehole of any orientation. All pieces of solid (cylindrical) core are summed and divided by the total length of the core run (It excludes all portions of core pieces that are not fully cylindrical as well as crushed or rubble zones).

Fracture Index (FI) is defined as the number of naturally occurring fractures within a given length of core. The Fracture Index is reported as a simple count of natural occurring fractures.

Terminology describing rock with respect to discontinuity and bedding spacing:

Spacing (mm)	Discontinuities	Bedding
>6000	*Extremely Wide*	-
2000-6000	*Very Wide*	*Very Thick*
600-2000	*Wide*	*Thick*
200-600	*Moderate*	*Medium*
60-200	*Close*	*Thin*
20-60	*Very Close*	*Very Thin*
<20	*Extremely Close*	*Laminated*
<6	-	*Thinly Laminated*

Terminology describing rock strength:

Strength Classification	Grade	Unconfined Compressive Strength (MPa)
Extremely Weak	R0	<1
Very Weak	R1	1 – 5
Weak	R2	5 – 25
Medium Strong	R3	25 – 50
Strong	R4	50 – 100
Very Strong	R5	100 – 250
Extremely Strong	R6	>250

Terminology describing rock weathering:

Term	Symbol	Description
Fresh	W1	No visible signs of rock weathering. Slight discoloration along major discontinuities
Slightly	W2	Discoloration indicates weathering of rock on discontinuity surfaces. All the rock material may be discolored.
Moderately	W3	Less than half the rock is decomposed and/or disintegrated into soil.
Highly	W4	More than half the rock is decomposed and/or disintegrated into soil.
Completely	W5	All the rock material is decomposed and/or disintegrated into soil. The original mass structure is still largely intact.
Residual Soil	W6	All the rock converted to soil. Structure and fabric destroyed.

STRATA PLOT

Strata plots symbolize the soil or bedrock description. They are combinations of the following basic symbols. The dimensions within the strata symbols are not indicative of the particle size, layer thickness, etc.

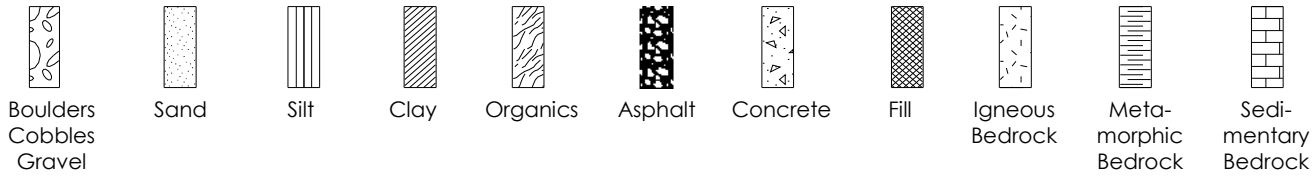

SAMPLE TYPE

SS	Split spoon sample (obtained by performing the Standard Penetration Test)
ST	Shelby tube or thin wall tube
DP	Direct-Push sample (small diameter tube sampler hydraulically advanced)
PS	Piston sample
BS	Bulk sample
HQ, NQ, BQ, etc.	Rock core samples obtained with the use of standard size diamond coring bits.

WATER LEVEL MEASUREMENT

measured in standpipe, piezometer, or well

inferred

RECOVERY

For soil samples, the recovery is recorded as the length of the soil sample recovered. For rock core, recovery is defined as the total cumulative length of all core recovered in the core barrel divided by the length drilled and is recorded as a percentage on a per run basis.

N-VALUE

Numbers in this column are the field results of the Standard Penetration Test: the number of blows of a 140 pound (63.5 kg) hammer falling 30 inches (760 mm), required to drive a 2 inch (50.8 mm) O.D. split spoon sampler one foot (300 mm) into the soil. In accordance with ASTM D1586, the N-Value equals the sum of the number of blows (N) required to drive the sampler over the interval of 6 to 18 in. (150 to 450 mm). However, when a 24 in. (610 mm) sampler is used, the number of blows (N) required to drive the sampler over the interval of 12 to 24 in. (300 to 610 mm) may be reported if this value is lower. For split spoon samples where insufficient penetration was achieved and N-Values cannot be presented, the number of blows are reported over sampler penetration in millimetres (e.g. 50/75). Some design methods make use of N-values corrected for various factors such as overburden pressure, energy ratio, borehole diameter, etc. No corrections have been applied to the N-values presented on the log.

DYNAMIC CONE PENETRATION TEST (DCPT)

Dynamic cone penetration tests are performed using a standard 60 degree apex cone connected to 'A' size drill rods with the same standard fall height and weight as the Standard Penetration Test. The DCPT value is the number of blows of the hammer required to drive the cone one foot (300 mm) into the soil. The DCPT is used as a probe to assess soil variability.

OTHER TESTS

S	Sieve analysis
H	Hydrometer analysis
k	Laboratory permeability
γ	Unit weight
G_s	Specific gravity of soil particles
CD	Consolidated drained triaxial
CU	Consolidated undrained triaxial with pore pressure measurements
UU	Unconsolidated undrained triaxial
DS	Direct Shear
C	Consolidation
Q_u	Unconfined compression
I_p	Point Load Index (I_p on Borehole Record equals $I_p(50)$ in which the index is corrected to a reference diameter of 50 mm)

	Single packer permeability test; test interval from depth shown to bottom of borehole
	Double packer permeability test; test interval as indicated
	Falling head permeability test using casing
	Falling head permeability test using well point or piezometer

Stantec

BOREHOLE RECORD

BH-01

CLIENT **MARITIME ELECTRIC COMPANY**

LOCATION **BORDEN SUBSTATION AND CAPE TORMENTINE RISER STATION**

DATES: BORING **2015-12-22** WATER LEVEL **2.4 m on 2015-12-22**

PROJECT No. **133546898**

BOREHOLE No. **BH-01**

DATUM **GEODETIC**

DEPTH (m)	ELEVATION (m)	SOIL DESCRIPTION	STRATA PLOT	WATER LEVEL	SAMPLES TYPE	NUMBER	RECOVERY	N-VALUE OR RQD
							mm	
0		ROOTMAT/TOPSOIL						
		Very loose to compact reddish brown clayey sand (SC) to sandy silty clay (CL-ML) TILL - trace to some gravel			SS	1	410	1
1					SS	2	360	14
					SS	3	460	11
2					SS	4	410	11
					SS	5	380	12
3					SS	6	480	12
4					SS	7	430	8
					SS	8		50/50
5		Inferred very poor quality weathered BEDROCK			A			
		End of borehole						
6								
7								
8								

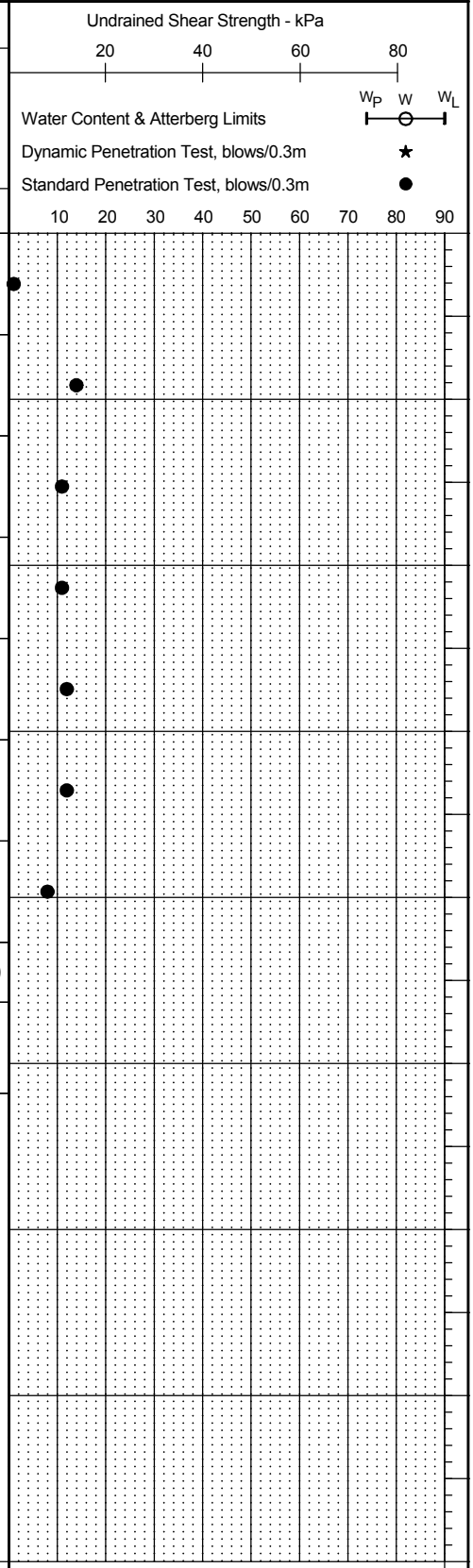

Stantec

BOREHOLE RECORD

BH-02

CLIENT **MARITIME ELECTRIC COMPANY**

LOCATION **BORDEN SUBSTATION AND CAPE TORMENTINE RISER STATION**

DATES: BORING **2015-12-22** WATER LEVEL **None Observed**

PROJECT No. **133546898**

BOREHOLE No. **BH-02**

DATUM **GEODETIC**

DEPTH (m)	ELEVATION (m)	SOIL DESCRIPTION	STRATA PLOT	WATER LEVEL	SAMPLES TYPE	NUMBER	RECOVERY	N-VALUE OR RQD
		ROOTMAT/TOPSOIL					mm	
0		Very loose to compact reddish brown clayey sand (SC) to sandy silty clay (CL-ML) TILL - trace to some gravel			SS	1	200	3
1					SS	2	310	6
					SS	3	410	6
2					SS	4	310	9
					SS	5	430	10
3					SS	6	410	6
4					SS	7	410	6
					SS	8	410	4
5					SS	9	330	6
					SS	10	360	9
6		End of borehole						
7								
8								

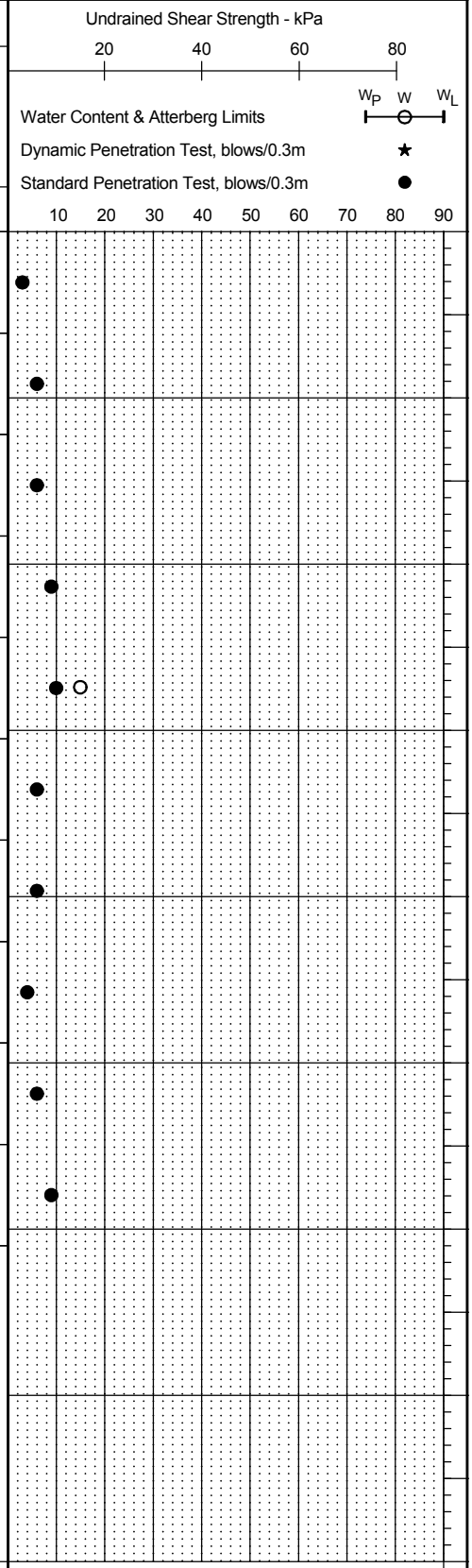

Stantec

BOREHOLE RECORD

BH-03

CLIENT **MARITIME ELECTRIC COMPANY**

LOCATION **BORDEN SUBSTATION AND CAPE TORMENTINE RISER STATION**

DATES: BORING **2015-12-22** WATER LEVEL **2.4 m on 2015-12-22**

PROJECT No. **133546898**

BOREHOLE No. **BH-03**

DATUM **GEODETIC**

DEPTH (m)	ELEVATION (m)	SOIL DESCRIPTION	STRATA PLOT	WATER LEVEL	SAMPLES TYPE	NUMBER	RECOVERY	N-VALUE OR RQD
		ROOTMAT/TOPSOIL					mm	
0		Very loose to compact reddish brown clayey sand (SC) to sandy silty clay (CL-ML) TILL - trace to some gravel			SS	1	180	2
1					SS	2	610	5
					SS	3	430	2
2					SS	4	150	3
					SS	5	460	5
3					SS	6	230	5
4					SS	7	330	9
					SS	8	380	5
5					SS	9	310	5
					SS	10		5
6		End of borehole						
7								
8								

Undrained Shear Strength - kPa: 20, 40, 60, 80

Water Content & Atterberg Limits: W_P W W_L

Dynamic Penetration Test, blows/0.3m ★

Standard Penetration Test, blows/0.3m ●

10 20 30 40 50 60 70 80 90

△ Unconfined Compression Test

□ Field Vane Test ■ Remoulded

✖ Torvane

Stantec

BOREHOLE RECORD

BH-04

CLIENT **MARITIME ELECTRIC COMPANY**

LOCATION **BORDEN SUBSTATION AND CAPE TORMENTINE RISER STATION**

DATES: BORING **2015-12-22** WATER LEVEL **1.8 m on 2015-12-22**

PROJECT No. **133546898**

BOREHOLE No. **BH-04**

DATUM **GEODETIC**

DEPTH (m)	ELEVATION (m)	SOIL DESCRIPTION	STRATA PLOT	WATER LEVEL	SAMPLES TYPE	NUMBER	RECOVERY	N-VALUE OR RQD
		ROOTMAT/TOPSOIL					mm	
0		Very loose to compact reddish brown clayey sand (SC) to sandy silty clay (CL-ML) TILL - trace to some gravel			SS	1	280	3
1					SS	2	330	5
					SS	3	310	8
2					SS	4	380	8
					SS	5	410	13
3					SS	6	310	15
4					SS	7	310	17
					SS	8	0	14
5					SS	9	230	15
					SS	10	180	50/150
		Inferred very poor quality weathered BEDROCK			A			
6		End of borehole						
7								
8								

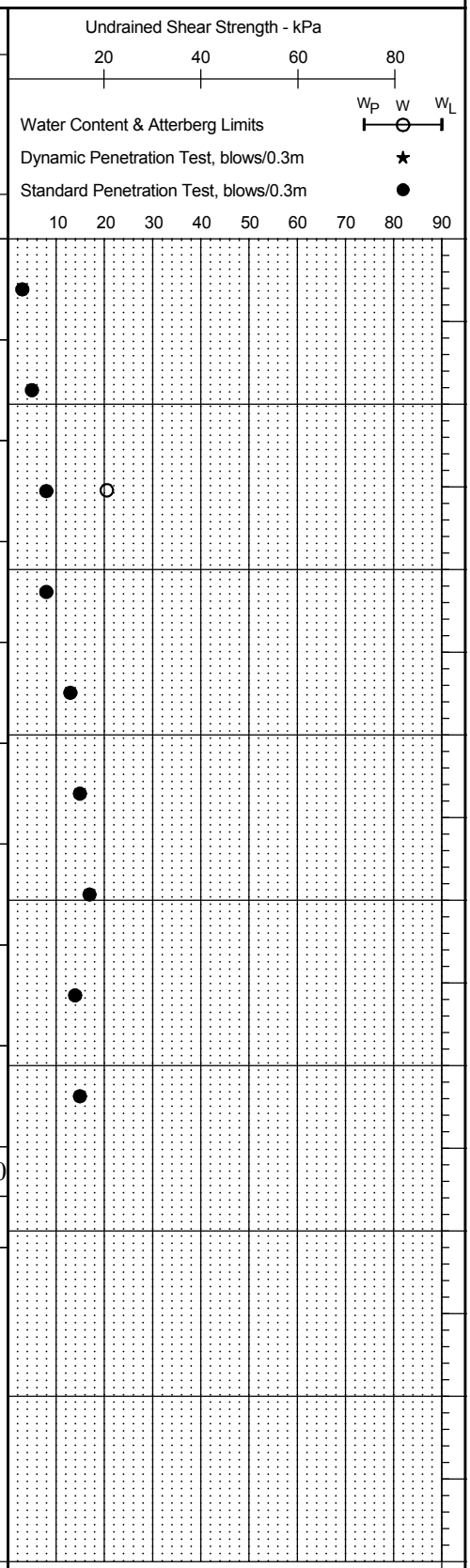

Stantec

BOREHOLE RECORD

BH-05

CLIENT **MARITIME ELECTRIC COMPANY**

LOCATION **BORDEN SUBSTATION AND CAPE TORMENTINE RISER STATION**

DATES: BORING **2015-12-23** WATER LEVEL **2.4 m on 2015-12-23**

PROJECT No. **133546898**

BOREHOLE No. **BH-05**

DATUM **GEODETIC**

DEPTH (m)	ELEVATION (m)	SOIL DESCRIPTION	STRATA PLOT	WATER LEVEL	SAMPLES TYPE	NUMBER	RECOVERY	N-VALUE OR RQD
		ROOTMAT/TOPSOIL					mm	
0		Very loose to compact reddish brown clayey sand (SC) to sandy silty clay (CL-ML) TILL - trace to some gravel			SS	1	150	1
1					SS	2	360	12
					SS	3	410	10
2					SS	4	380	12
					SS	5	310	12
3					SS	6	250	27
4					SS	7	430	16
					SS	8	200	21
5					SS	9	330	51
		Inferred very poor quality weathered BEDROCK			A			
6					SS	10		50/25
		End of borehole						
7								
8								

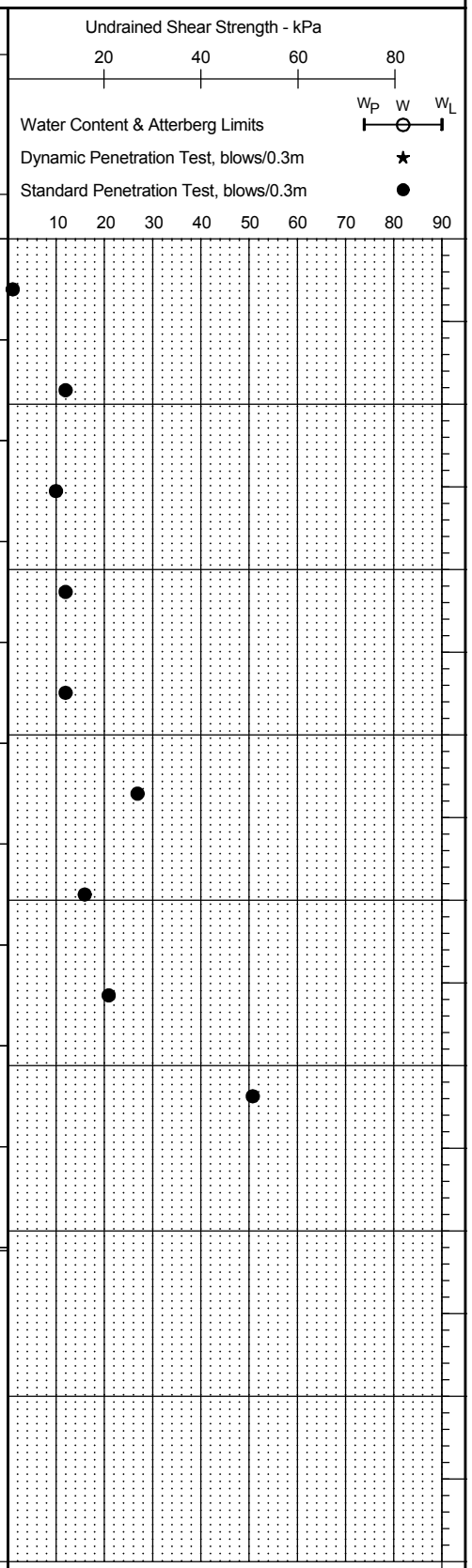

Stantec

BOREHOLE RECORD

BH-06

CLIENT **MARITIME ELECTRIC COMPANY**

LOCATION **BORDEN SUBSTATION AND CAPE TORMENTINE RISER STATION**

DATES: BORING **2015-12-23** WATER LEVEL **2.4 m on 2015-12-23**

PROJECT No. **133546898**

BOREHOLE No. **BH-06**

DATUM **GEODETIC**

DEPTH (m)	ELEVATION (m)	SOIL DESCRIPTION	STRATA PLOT	WATER LEVEL	SAMPLES TYPE	NUMBER	RECOVERY	N-VALUE OR RQD
		ROOTMAT/TOPSOIL					mm	
0		Very loose to compact reddish brown clayey sand (SC) to sandy silty clay (CL-ML) TILL - trace to some gravel			SS	1	180	15
1					SS	2	310	11
					SS	3	80	10
2					SS	4	410	16
					SS	5	330	24
3					SS	6	150	23
4					SS	7	230	31
					SS	8	330	23
5					SS	9	180	28
					SS	10	360	62
6		Inferred very poor quality weathered BEDROCK						
		End of borehole						
7								
8								

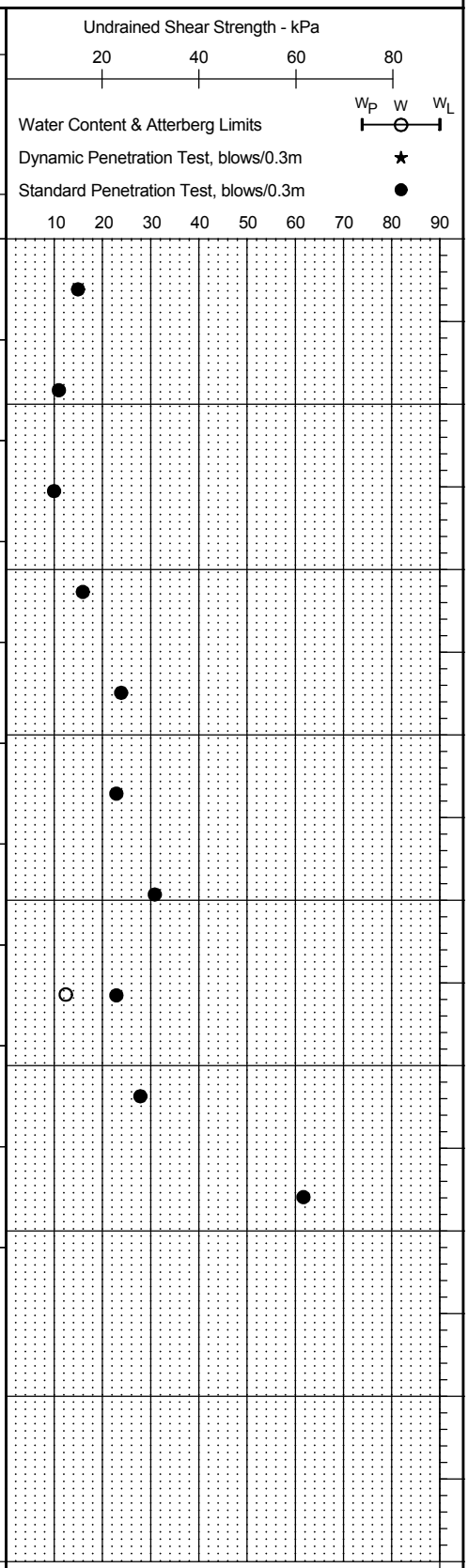

Appendix D

Laboratory Test Results

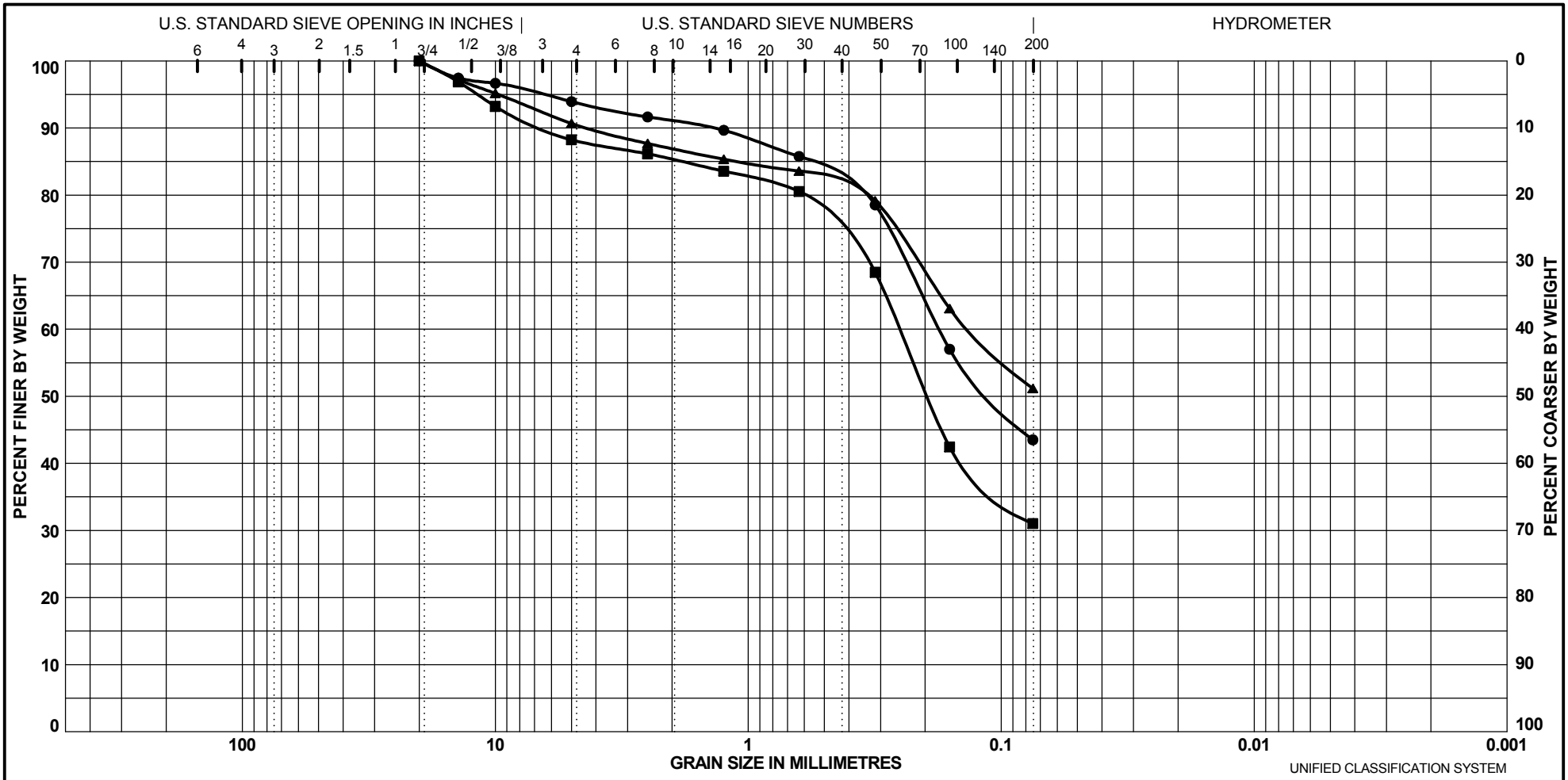

UNIFIED CLASSIFICATION SYSTEM

COBBLES	GRAVEL		SAND			SILT and CLAY	
	coarse	fine	coarse	medium	fine	SILT	CLAY

	Source	Depth	Description	W%	W_L	W_P	I_P	%Gravel	%Sand	%Silt	%Clay
●	BH-02	2.7	Clayey sand (SC) TILL	15.0				6.2	50.3	43.5	
■	BH-04	1.5	Clayey sand (SC) TILL	20.6				11.9	57.1	31.0	
▲	BH-06	4.6	Sandy silty clay (CL-ML) TILL	12.4				9.5	39.3	51.2	

Stantec

Project: **Borden Substation And Cape Tormentine Riser Station**	Location:
Job No.: **133546898**	Notes:
Date: **January 2016**	**GRADATION CURVES**

APPENDIX V

INTENT TO BID FORM

Acknowledgment of Inquiry

PLEASE COMPLETE AND RETURN THIS FORM BEFORE APRIL 29, 2016 AT 2:00PM ADT

To be e-mailed to the following address:

cooke@maritimeelectric.com
Attention: Patrick Cooke

Re: Specification No. 133546898S301:
SPECIFICATION FOR
BORDEN SUBSTATION AND CAPE TORMENTINE
RISER STATION CONSTRUCTION

( ) We will submit our quotation to you on or before 12:00 p.m. on May 20, 2016. Representative for all correspondence pertaining to the subject inquiry shall be as follows:

Name:
Telephone:
Fax:
E-Mail:

The bid will be accompanied by the following required documents
- Tender Submission form
- Technical acceptance or exceptions tracking form
- Terms & Conditions acceptance or exceptions tracking form
- All additional documentation and information as specified in the Tender documents.

Date: _____

Name: _____

Signature: _____

APPENDIX VI

PROTECTION, CONTROL AND TELECOM PHILOSOPHY

NB Power/Maritime Electric Inc. 138kV Cable Interconnection Project

Protection, Control & Telecom Philosophy

Prepared for:
Maritime Electric Inc.
180 Kent Street
Charlottetown PE C1A 7N2

Prepared by:
Hassan Fayaz, P.Eng.
Murray Gordon, P.Eng
Stantec Consulting Ltd.

March 21, 2016

133546898

NB POWER/MECL 138KV CABLE INTERCONNECTION PROJECT

This document entitled NB Power/MECL 138kV Cable Interconnection Project Protection and Control Philosophy was prepared by "Stantec" for the account of Maritime Electric Inc. (the "Client"). Any reliance on this document by any third party is strictly prohibited. The material in it reflects Stantec's professional judgment in light of the scope, schedule and other limitations stated in the document and in the contract between Stantec and the Client. The opinions in the document are based on conditions and information existing at the time the document was published and do not take into account any subsequent changes. In preparing the document, Stantec did not verify information supplied to it by others. Any use which a third party makes of this document is the responsibility of such third party. Such third party agrees that Stantec shall not be responsible for costs or damages of any kind, if any, suffered by it or any other third party as a result of decisions made or actions taken based on this document.

Prepared by _____
(Signature)

Hassan Fayaz, P.Eng

Prepared by _____
(Signature)

Murray Gordon, P.Eng

Reviewed by _____
(Signature)

Collin Sleep, P.Eng

Rev.	Description	Prepared By	Reviewed By	Issue Date
A	Issue for Review	Hassan Fayaz	Hassan Vahed Klankesh	December 11, 2015
B	Issue for Review	Hassan Fayaz	Hassan Vahed Klankesh	February 2nd, 2016
C	Issued for PCT bid	Hassan Fayaz and Murray Gordon	Collin Sleep	March 21, 2016

Table of Contents

1.0 INTRODUCTION 1.1
1.1 PROJECT DESCRIPTION 1.1

2.0 PROTECTION PHILOSOPHY 2.1
2.1 GENERAL 2.1
2.2 NERC AND NPCC COMPLIANCE 2.2
2.3 DC AND AC STATION SERVICE 2.2
2.4 CABLE/LINE PROTECTION 2.3
2.5 TRANSFORMER PROTECTION 2.3
2.6 SHUNT REACTOR PROTECTION 2.4
2.7 BREAKER MONITORING 2.4
2.8 MOTORIZED DISCONNECTING SWITCHES (MOD) MONITORING 2.4
2.9 BREAKER FAILURE PROTECTION 2.5
2.10 SYNCHRONISM CHECK 2.5
2.11 AUTO RECLOSING 2.5

3.0 CONTROL, MONITORING AND METERING 3.1
3.1 GENERAL 3.1
3.2 INTERLOCKING AND CLOSE PERMISSION 3.1
3.3 SCADA, RTU 3.1
3.4 REMOTE CLOSING AND OPENING 3.2
3.5 LOCAL CLOSING AND OPENING 3.2
3.6 METERING 3.2
3.7 REVENUE METERING 3.3

4.0 P&C PHILOSOPHY OF THE NB POWER/ MECL 138KV INTERCONNECTION CABLE PROJECT 4.1
4.1 GENERAL 4.1
4.1.1 Cape Tormentine Metering and Switching Station 4.1
4.1.2 Borden Substation 4.1

5.0 TELECOMMUNICATION SYSTEMS 5.1
5.1 OVERVIEW 5.1
5.3 DESIGN CRITERIA 5.2
5.3.1 Communications Design 5.2
5.3.2 Network Design 5.2
5.3.3 Protocols 5.3
5.3.4 Teleprotection 5.4
5.3.5 Metering 5.4
5.3.6 Interface Design 5.5
5.4 PREFERRED EQUIPMENT CRITERIA 5.6
5.4.1 General Layout 5.6
5.4.2 Preferred Equipment 5.6
5.4.3 Submarine Cable – Fibre Terminations 5.9

5.4.4 Fibre Cable to Existing Control Room 5.9
5.4.5 Power Requirements 5.10
5.4.6 Grounding 5.10

LIST OF FIGURES

Figure 1- Station Network Architecture Diagram 3.2

LIST OF APPENDICES

APPENDIX 1 ..... **7**
1.1 133546898E-8001 .....

APPENDIX 2 ..... **8**
2.1 133546898E-8002 .....
2.2 (This report includes the latest drawing available at the time of the report issue. Consult the project drawing log for the latest version of the drawing.) .....

APPENDIX 3 ..... **9**
3.1 133546898E-8003 .....

APPENDIX 4 ..... **10**
4.1 133546898E-8004 .....

APPENDIX 5 ..... **11**
5.1 133546898E-8005 .....

APPENDIX 6 ..... **12**
6.1 MECL NB 138kV Cable Project-NPCC Criteria Mapping Spreadsheet .....

APPENDIX 7 ..... **13**
7.1 MECL/NB Line Differential Protection Configuration .....

APPENDIX 8 ..... **14**
8.1 MECL/NB 138kV Interconnection Cable-One Line Diagram .....

APPENDIX 9 ..... **15**
9.1 Network Architecture Borden Substation .....

1.0 INTRODUCTION

This document provides a high level overview of the protection, control and telecom philosophy for the design of a substation and a Protection, control and Telecom (PCT) building in Borden, PEI as well as a riser station in Cape Tormentine, NB. These facilities make up a larger project to provide a new interconnecting submarine power cable from New Brunswick to PEI. The substation in Borden and the riser station in Cape Tormentine will be the termination points for two submarine cables that will be installed in the Northumberland Strait.

The main purpose of this document is to highlight the key protection and control requirements to assist the engineering team and for the New Brunswick Power (NB Power) and Maritime Electric Inc. (MECL) to design the protection and control systems for this interconnecting project.

1.1 Project Description

The project is to design of a substation and PCT in Borden, PEI as well as a riser station in Cape Tormentine, NB. These facilities make up a larger project to provide a new interconnecting submarine power cable from New Brunswick to PEI. The substation in Borden and the riser station in Cape Tormentine will be the termination points for two submarine cables that will be installed in the Northumberland Strait.

2.0 PROTECTION PHILOSOPHY

2.1 General

In this section the protection philosophy is described in general. The key elements of protection applicable to all substation facilities and pertaining to transmission level voltages are highlighted.

- Unless specified otherwise, each element of the station is independently protected by two (2) protection systems. These protection systems do not use components common to the two systems.
- Each system is independently capable of detecting and isolating all faults on its respective elements.
- Two (2) identical protection systems are not employed for the protection of same equipment to avoid the risk of simultaneous failure of both systems.
- The unit protection systems are designed to isolate only the faulted element (e.g 87T, 87L). For the faults outside the protected zone, the other elements of the protection system will detect the fault however they will be delayed to allow for the operation of the other zone and the corresponding protection (e.g over current elements).
- Critical features, such as the protection operation or circuit breaker operation will be annunciated and monitored by Disturbance Fault Recorder (DFR) embedded within the Intelligent Electronic Devices (IEDs).
- The two (2) protection systems are supplied from separate current and voltage transformers.
- Where "A" and "B" Protections are used, there will be separation between them as per NPCC.
- Separate blocking switches for inputs and outputs of the protective relays will be used. These blocking switches will be used for protection and control function but not alarm and monitoring functions. Blocking switches to be installed at the lower part of the panel.
- Dual Local Area network (LAN) will be designed in such a way that no single failure will impact the functionality of the system. Also, it will be designed with the provisions for future IEC61850 applications.
- Separate blocking switches for AC current, AC voltage and DC (Red blocking switches used for trips).
- Separately fused and monitored DC sources are used with the two (2) protection systems.
- Each station battery will have enough capacity to allow the station to operate for a minimum of eight (8) hours on back-up power.
- Protection system circuitry and physical arrangements are designed to minimize the possibility of incorrect operations from personnel error.
- The protection system is equipped with the Breaker Failure Protection to protect the system when the breaker fails to clear the fault. The time duration to clear the fault can be set to 10 Cycles as per the MECL's current practice. This is achieved by tripping the adjacent local breakers as well as using transfer trip signal transmitted to the remote ends via telecommunication systems to trip the remote breakers.

- The DC voltage supplied to the tripping coils of the breaker is fed from two separately fused and monitored DC supplies.
- All IEDs will be IEC 61850 compliant
- Any signal that opens remote breakers on the transmission system (TT Signal – if any) will be automatically removed when the main local disconnect switch opens.

2.2 NERC and NPCC Compliance

Although NB Power/Maritime Electric Inc. 138kV Cable Interconnection Project is not presently required to comply with NPCC, NERC and FERC requirements, the project will be designed with the provision to comply in the future with NPCC, NERC and FERC requirements. The design must allow for the installation of all additional control/monitoring devices, cable, wiring etc. in the future. The followings are the related NERC standards that need to be considered when designing a Bullk Electricity System (BES) station. Some are related with protection and control systems:

Some of the standards to be considered include (but not necessarily limited to):

- COM-001 Telecommunications;
- CIP-005 Cyber Security – Electronic Security Perimeter(s);
- CIP-006 Cyber Security – Physical Security of Critical Cyber Assets;
- CIP-014 Physical Security;
- FAC-008 Facility Ratings;
- PRC-002 Disturbance Monitoring;
- PRC-018 Disturbance Monitoring Equipment; and
- PRC-023 Transmission Relay Load ability.

NPCC excerpts related to protection system design are indicated in Appendix 6.

2.3 DC and AC Station Service

Station service for 120/240 VAC supply is provided from two sets of single phase Power PTs, each set 75 kVA 84kV/120-240V with one set installed on each 138kV Bus of Borden substation.

At Cape Tormentine, a Power PT 75kVA 84kV/120-240V will be used for AC station service. Another 120-240VAC feed from NB Power will be provided and can feed the station as an alternate source of power.

An Auto Transfer Scheme (ATS) will be provided for switching between the Main and the Alternate sources of AC Power. A metering cabinet with a socket type meter will measure the energy consumed by the station service. A stationary 50kW 120-240V generator will be used in Borden in case none of the above-mentioned sources are available. The generator will automatically start up as soon as the utility power becomes unavailable and another ATS will automatically close to power up the station service load through the generator.

Station service for 125 VDC critical loads is provided from two (2) sets of flooded lead-acid battery system and associated chargers.

2.4 Cable/Line Protection

The phase distance protection will respond to a fault condition as measured by the CT's and PT's. All phase and ground loops will be measured. There will be four (4) available zones of phase and ground distance protection (21P and 21G) with MHO characteristics, memorized positive sequence voltage polarization, directional, and overcurrent supervision available to use. Over voltage elements (59) will be used to protect cables against temporary and permanent over voltages. Directional ground time over current elements can be provided for high resistive ground faults.

The relay will provide Switch On To Fault (SOTF) protection. The relay operation in the case of SOTF shall be faster than responding to a line fault and it shall bypass certain algorithm which is used for line fault detection. Switch On To Fault Logic overrides the tripping delay to clear the fault on Zone 2 and 67N.

The internal logic of the relay will provide Loss of Potential (LOP) function and detect PT fuse failure. The operation of distance and directional elements can be blocked upon the detection of LOP.

The relay will provide disturbance recording capability Oscillography (Transient Recorder).

The other functions available within the transmission line protection shall include Open Phase Detection, Loss of Potential, Negative Sequence and/or Zero Sequence Directional elements, Fault Location detection capability, Zone Time Delay, The time delay will be 300 m Sec.

In addition, all Communications Assisted Tripping Logic will be included in the relay including Permissive Overreaching Transfer Tripping Scheme (POTT). Line End Open is required to disregard the fault detection by the other end. The MECL's current practice is to provide Permissive Trip when breaker is open (or MOD is open) at the other end.

In addition to all of the above mentioned functions and elements, Line Differential Logic shall be provided for those protective devices as indicated in the single line diagrams.

The communication channel between two terminals (or three terminals) shall be through a microwave radio link telecommunication network.

For any fault on the line, MECL, uses Zone 2 distance and 67N set for SOTF. The 52A pole open time delay is 10 cycles. The SOFT Enable duration is set at 30 cycles. MECL sets Zone 1 at 85%, Zone 2 at 130%, and reverse Zone 3 for current reversal.

2.5 Transformer Protection

The transformer protection shall include Positive and Negative Restrained Percentage Differential Protection elements with at least two slopes, Restricted Ground Fault Element, Unrestrained Differential and instantaneous elements for faults on the HV bushings, Timed Phase and Ground Over Current protection elements for time graded protection with downstream relays, Sequence of Event Recording and Oscillography, Volt/Hertz for over flux protection, Over and Under Voltage for alarm to the control center and Loss of Potential Logic for every Voltage input.

Also, all mechanical protection of the transformer including Rapid Pressure Rise Relay, Pressure Relief, Winding temperature, Oil temperature, oil Level shall be hard wired to the digital inputs of the SEL 2414 which in turn trips the breakers via fiber and the other IEDs. SEL 2414 shall have IEC 61850 capability which will be used in the future.

Each transformer protection will trip an External Lock Out relay (86T) for every serious internal fault such as Rapid Pressure Rise, any Phase or Restricted Ground Percentage Differential element to sustain trip and block closing on the circuit breakers.

2.6 Shunt Reactor Protection

The reactor protection shall include Positive and Negative Restrained Percentage Differential Protection elements with at least two (2) slopes, Restricted Ground Fault Element, Unrestrained Differential and instantaneous elements for faults on the HV bushings, Timed Phase and Ground Over Current protection elements for time graded protection with downstream relays, Sequence of Event Recording and Oscillography, Volt/Hertz for over flux protection, Over and Under Voltage and Loss of Potential Logic for every Voltage input.

Also, all mechanical protection of the reactor including Rapid Pressure Rise Relay, Pressure Relief, Winding temperature, Oil temperature, oil Level shall be hard wired to the digital inputs of the SEL 2414 which in turn trips the breakers via fiber and other IEDs .

Each reactor protection will trip an External Lock Out relay (86R) for every serious internal fault such as Rapid Pressure Rise, any Phase or Restricted Ground Percentage Differential element to sustain trip and block closing on the circuit breakers.

2.7 Breaker Monitoring

A SEL 2440 with IEC 61850 capabilities will be used to connect all auxiliary devices in the breaker control cabinet to this relay. The SEL 2440 will be connected to RTAC through dual Ethernet fiber ports, multimode 62.5 µm fiber optic cables and Ethernet managed switches. Even though SEL 2440 will be able to close and open the breaker, this function will be used in the future when IEC 61850 is implemented. IEC 61850 capabilities of the relay will be used in the future. The connections to the input and the outputs of these relays are indicated in the corresponding sections for each breaker.

2.8 Motorized Disconnecting Switches (Mod) Monitoring

A SEL 2440 with IEC 61850 capabilities will be used to connect all auxiliary devices in a cabinet close to any MOD and its associated grounding switch. The MOD monitoring will include alarms, status, 43L/R status, etc. the control can be over the Mirrored Bits. The SEL 2440 will be connected to RTAC through dual Ethernet fiber ports, multimode 62.5 µm fiber optic cables and Ethernet managed switches. Even though SEL 2440 will be able to close and open the MOD, this function will be used in the future when IEC 61850 is implemented. IEC 61850 capabilities of the relay will be used in the future. The connections to the input and the outputs of the IEDs are indicated in the corresponding sections for each protection.

After the associated breakers open due to a fault, the MOD opens automatically, and then breakers will be closed to provide more security for the rest of the station load. This function shall not be used for a fault occurred within the substation. The function of automatic opening and closing of the MODs after a disturbance shall be able to be Enabled or Disabled using the relays programmable pushbuttons on the front panel of the relay and through the relay settings. For

overhead lines with auto reclosing function, it shall allow for the first auto reclosing and the MOD automatic opening shall only occur once auto reclosing has operated and has not been successful. Also, the relay setting shall not allow any operation of the MOD When the breakers are closed. A Special MOD control scheme may be required for Cables 3 and 4 due to the trapped charges. The MODs for The cable 3 and 4 shall only open automatically, when the time for discharging the respective cables through the PTs is elapsed.

2.9 Breaker Failure Protection

In case of breaker failure, the protection trip plus 50BF element pick up plus 52a contact and/or time will initiate trip of the adjacent zones including the other end of the line which will be performed via communication channel. The breaker failure timed function will trip the adjacent zones including the remote. An internal 86BF Latch Bit will lock out the breaker failure trip until it is reset by the crew after they investigate the cause of failure.

2.10 Synchronism Check

The synchronism check system will be used to prevent closing of the circuit breaker with difference in the phase, frequency or magnitude of two (2) voltages (manual closing and auto reclosing). This will require synchronism check on both sides of the breakers before closing. Alternatively, a permissive close can be released in case of a Live Bus and Dead Line (LBDL) scenario or a Live Line and Dead Bus (LLDB). The Potential Transformers are available on each side of the circuit breakers. Phase B potential Transformer shall be used for synchronism check.

2.11 Auto Reclosing

When Auto-reclosing function is required for a transmission line, the corresponding logic will be initiated by any protection trip. The protection trip shall not be a serious fault within the facilities. The transformer X3, cables C3, C4 or reactors R3, R4 do not require auto reclosing. Only transient overhead transmission line faults are eligible for auto-reclosing function. Auto-reclosing function is used in combination with LLDB or LBDL or synch check elements to prevent any out of phase closing.

3.0 CONTROL, MONITORING AND METERING

3.1 General

In this section the control, monitoring and metering philosophy is described in general. The key elements of control and monitoring applicable to all substation facilities and pertaining to transmission level voltages are highlighted.

3.2 Interlocking and Close Permission

The circuit breakers shall have mechanical and electrical interlocking with the associated disconnecting switches so that the disconnecting switches will never be operated when the circuit breaker is closed. Also, the circuit breaker will not be able to operate when the associated motorized disconnecting switch is in the middle position. The associated MOD will have to be either in fully open or fully closed position in order to allow the circuit breaker to be able to be closed.

Any disconnecting switch with a grounding blade shall have mechanical interlock with its grounding blade so that it only can be closed when the grounding switch is fully open. Also, the grounding switch shall mechanically be interlocked with the main switch. It shall be able to close when the main switch is fully open. In addition, the motorized disconnecting switches shall only be able to be operated electrically when the corresponding grounding switches are fully open.

Any circuit breaker on the LV side of the transformer shall have interlocking with grounding switch on the other side both mechanically and electrically.

The close permission shall be provided by the protection IEDs to insure all requirements for interlocking and synchronism check logic are fulfilled.

3.3 SCADA, RTU

SEL RTAC Real Time Automation Controller will be used. All IEDs will be connected to RTAC through a Dual LAN Network. There will be redundant network switches and the LAN shall be suitable for DNP 3.0 at the initial stage of operation and the future use of IEC 61850.

All equipment status, alarms and monitoring will be performed through RTAC either locally from station HMI or remotely through the control center. Relay events collection systems by both SEL Team and SUBNET as per the Station Network Architecture Diagram.

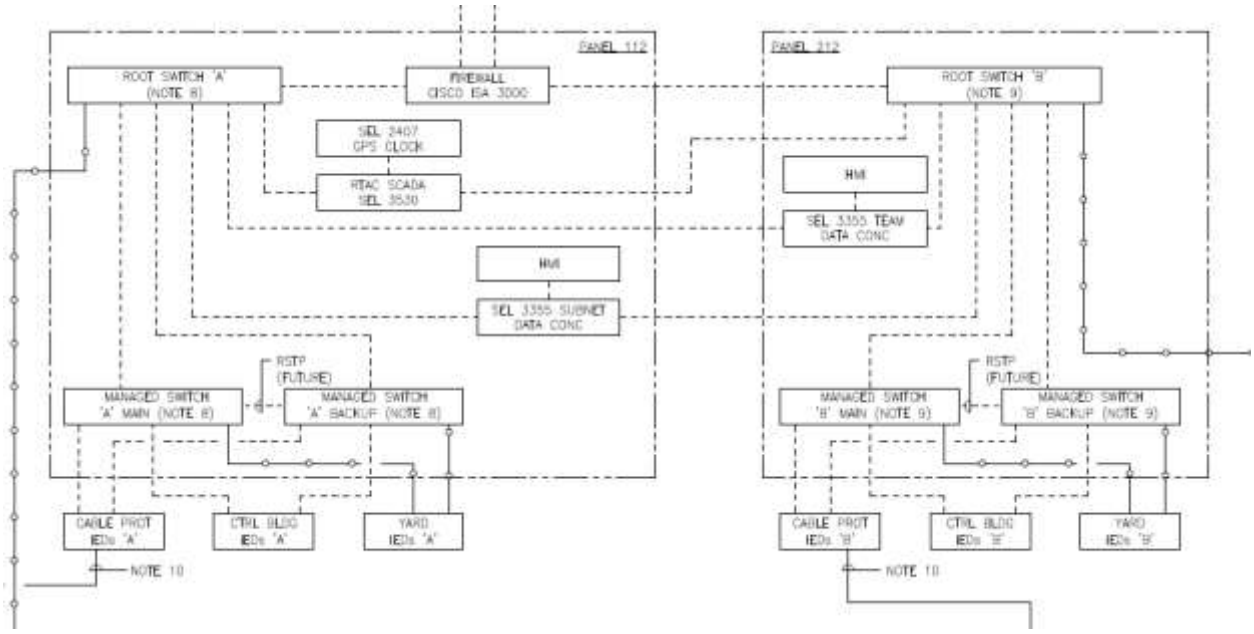

Figure 1- Station Network Architecture Diagram

3.4 Remote Closing and Opening

Equipment operation such as close and open can be (provision for future implementation of IEC 61850) performed through communication between RTAC and the breaker monitoring IED (SEL 2440) and through hardwired output contacts of SEL 2440 to the respective circuit breakers and the motorized disconnecting switches.

A 43 L/R selector switch (one per each circuit breaker, each circuit switcher and each MOD) will transfer the control to RTU. The control will be by the control Centre when the switch is left at "Remote".

3.5 Local Closing and Opening

Panel mounted control switches will be wired to the IEDs to open or close the breakers and the motorized disconnecting switches. The green and red LEDs on the control switch will indicate the status of the corresponding breaker or motorized disconnecting switch (Red = Close, Green = Open). For the transmission lines which use auto reclosing function, a 43-79CS switch will be used to enable and disable the auto reclosing function. The 43-79CS will also be wired to an input of the respective IED.

3.6 Metering

Three (3) Phase Current, Three (3) Phase Voltage (L-G), MW and MVAR for each element of the station will be measured using the protective IEDs. This is indication metering which is required by SCADA and for local control.

3.7 Revenue Metering

Any load or generation facility shall be connected to the utility grid through metering equipment and revenue will be metered at the defined point of metering. Refer to 4.1.1 for the details.

4.0 P&C PHILOSOPHY OF THE NB POWER/ MECL 138KV INTERCONNECTION CABLE PROJECT

4.1 General

In this section the protection, control, monitoring and metering philosophy is described specifically for the NB Power/MECL 138kV Cable Interconnection project. The following sections describe the required equipment and the systems.

4.1.1 Cape Tormentine Metering and Switching Station

Refer to the single line diagram of the project:

All disconnecting switches shall be motorized with 125VDC power supply. The status of all switches will be monitored and they shall be operatable locally and remotely through SCADA. The interlocking between the grounding blades and the main switch shall follow the interlocking rules described earlier under section 3.2.

Lightning arresters shall be installed on the cable terminals as well as the line terminals which will protect the cables as well as the revenue metering equipment. The arrester sizing will need to be coordinated with the cable manufacturer.

The station also will be equipped with revenue metering combined CT/PT and outdoor boxes complete with the meters and the communication equipment. MECL will use the Ethernet port and NP Power will use the serial port of the meter. Then the data will be sent via fiber in the cable back to Borden Substation.

A control building will house the battery, chargers, AC/DC panels, control panels, telecommunication equipment, RTU, SCADA HMI and control switches for operation of the station.

A Power PT 75kVA 84kV/120-240 will be used for AC station service. Another 120-240VAC feed from NB Power will be provided and can feed the station as an alternate source of power. An Auto Transfer Scheme (ATS) will be provided for switching between the Main and the Alternate sources of AC Power.

4.1.2 Borden Substation

Refer to the single line diagram of the project. In general, there will be two (2) buses and three (3) blocks of three (3) circuit breakers, their associated manual/motorized disconnecting switches and grounding switches where each block facilitates connection of two objects such as transmission lines, transformers or cables and their reactors.

The disconnecting switches 89-3002, 89-3006, 89-3013, 89-3017, 89-3023 and 89-3028 shall be motorized (with 125VDC power supply) Those which are used for breakers and reactors isolation will be non-motorized. The status of all switches will be monitored and they shall be operatable locally and remotely through SCADA. The interlocking between the grounding blades and the main switch shall follow the interlocking rules described earlier under section 3.2.

Lightning arresters shall be installed on the cable, reactor and the auto transformer terminals. The arrester sizing will need to be coordinated with the cable manufacturer.

A PCT building will house the battery, chargers, AC/DC panels, communication equipment, protection and control panels, marshalling racks, RTU, SCADA HMI and control switches for operation of the station.

Two (2) Power PTs 75kVA 84kV/120-240 each will be used for AC station service, one (1) on each of the 138 kV buses. An Auto Transfer Scheme (ATS) will be provided for switching between the Main and the Alternate sources of AC Power. A metering cabinet with a socket type meter will measure the energy consumed by the station service. A stationary 50kW 120-240V generator will be used in Borden in case none of the above-mentioned sources are available. The generator will automatically start up as soon as the utility power becomes unavailable and another ATS will automatically close to power up the station service load through the generator.

4.1.2.1 138/69kV Auto Transformer X3 "B" and Back up Protection, CB-9006, CB-9007 and CB-947 (69kV) Prot. & Control

There shall be one (1) protection cabinet for "B" and back up protection. SEL487E to be used as "B" Protection for The Auto Transformer including 50/51, 50/51G on each winding, Differential 87T, Negative Sequence Differential Element 87Q to protect against the turn to turn faults, Restricted Ground Differential 87G. All transformer mechanical protections (Alarm and Trips) such as 49T, 26Q, 63P, 63T, 71Q, fan failure alarms (if any) to be wired to the digital inputs of a SEL 2414 relay. This relay is installed in the control cabinet of the auto transformer. In case of a serious internal fault detected by 63T, the SEL 2414 will send trip to SEL 451 Transformer Back up Protection. The SEL 451 will include 50/51, 50/51G on HV and LV windings. In case of any serious internal fault (87T, 87Q, 87G, 63T), SEL 487E and SEL 451 will energize A86T Auto Transformer Lock Out Relay which latches the trips on the transformer breakers and blocks any breaker closing on the auto transformer until the cause of the failure is cleared and the investigation is complete which at that time the A86T can be reset.

In case of any fault detection, the 50BF elements and the BF Logic for CB-9006, CB-9007 and CB-947 (69kV), which are embedded in the SEL 487E, will be initiated internally by any protection element operated and externally by other relays. e.g SEL 411L for CB-9007, bus bar protection for CB-9006 and any protection in the 69kV yard which trips the CB-947 (69kV). The breaker failure operation of CB-9006, CB-9007 and CB-947 69kV will energize an internal latch bit 86BFX3/B of these breakers which in turn will trip and latches trips on all the respective local adjacent breakers as well as block closing of them.

The elements LLDB, LBDL and 25 for synch check of SEL 451 for CB-9006 and CB-9007 will check the voltages across theses breakers and provide close permission for any local closing by the corresponding control switch or for any remote closing through SCADA or HMI.

The SEL 451 will provide 50/51, 50/51G functions on each 138 and 69 kV windings.

A SEL 2440 will be used as breaker I/O module which will be installed in the control cabinet of each breaker. The breaker I/O module will communicate with RTAC SEL 3530. The SEL 2440 will be connected to RTAC through dual Ethernet fiber ports, multimode 62.5 µm fiber optic cables and Ethernet managed switches. Even though SEL 2440 will be able to close and open the breaker, this function will be used in the future when IEC 61850 is implemented.

Another SEL 2440 relay will be used in the PCT building Group B panel and will be used as a control IED when the SEL 487E is out of service due to maintenance.

The following inputs will need to be wired to the SEL 2414 relay:

- 26Q (90°C);
- 26Q (105°C);

- 49T (105°C);
- 49T (135°C);
- 71Q-1;
- 71Q-2;
- 71Q-3;
- 63P;
- 63T;
- Fan Failure;
- 27AC; and
- 27DC (Last input of the relay) Fan Failure.

The following inputs will need to be wired to the SEL 2440 as Remote I/O Module for CB-9006:

- CB-9006- 52a;
- CB-9006-52b;
- CB-9006 43R/L-R;
- CB-9006 63P-1(SF6 Low Pressure Alarm;
- CB-9006 63T (SF6 Low Pressure Lock out);
- CB-9006 Trip Coil 1 Failure;
- CB-9006 Trip Coil 2 Failure;
- CB-9006 Loss of Spring Charge Motor Voltage;
- CB-9006 Spring Charge Failure;
- CB-9006 Close Spring Charge Failure;
- CB-9006 Loss of AC Supply;
- CB-9006 Loss of Heater Voltage;
- CB-9006 Loss of DC supply power (The last input of the relay);
- Output for CB-9006 Close; and
- Output for CB-9006 Open.

The following inputs will need to be wired to the SEL 2440 as Remote I/O Module for CB-9007:

- CB-9007- 52a;
- CB-9007-52b;
- CB-9007 43R/L-R;
- CB-9007 63P-1(SF6 Low Pressure Alarm;
- CB-9007 63T (SF6 Low Pressure Lock out);
- CB-9007 Trip Coil 1 Failure;
- CB-9007 Trip Coil 2 Failure;

- CB-9007 Loss of Spring Charge Motor Voltage;
- CB-9007 Spring Charge Failure;
- CB-9007 Close Spring Charge Failure;
- CB-9007 Loss of AC Supply;
- CB-9007 Loss of Heater Voltage;
- CB-9007 Loss of DC supply power (The last input of the relay);
- Output for CB-9007 Close; and
- Output for CB-9007 Open.

The following inputs will need to be wired to the SEL 2440 as Remote I/O Module for 89-3023:

- 89-3023- 89a;
- 89-3023-89b;
- 89-3023 43R/L-R;
- 57-3024-57a;
- 57-3024-57b;
- Motor thermal overload;
- Loss of AC power supply;
- Loss of heater voltage;
- 89-3023 Loss of DC supply power (The last input of the relay);
- Output for 89-3023 Close; and
- Output for 89-3023 Open.

The SEL 2440 as Remote I/O Module for CB-947 (69kV):

The breaker monitoring for CB-947 (69kV) of the auto transformer is in MECL's scope of work.

The following inputs will need to be wired to the SEL 2440 relay as the local control IED in the "B" Group:

- Control Enable/Disable (Activation by SEL487E);
- 43-52CS for Open CB-9006;
- 43-52CS for Close CB-9006;
- 43-52CS for Open CB-9007;
- 43-52CS for Close CB-9007;
- 43-52CS for Open CB-947;
- 43-52CS for Close CB-947;
- 43-89CS for Open MOD 3023;
- 43-89CS for Close MOD 3023;
- CB-9006 52a;

- CB-9006 52b;
- CB-9007- 52a;
- CB-9007 52b;
- CB-947-52a;
- CB-947-52b;
- MOD 3023 -89a;
- MOD 3023 -89b;
- 43L/R-L CB-9006;
- 43L/R-L CB-9007;
- 43L/R-L CB-947;
- 43L/R-L MOD 3023;
- GS 3024-57b;
- 86T X3/B Status; and
- 27DC (The last input of the relay).

The following outputs of SEL 2440 relay as the local control IED in the "B" Group will need to be wired to the equipment:

- Trip CB-9006 Trip Coil 2;
- Trip CB-9007 Trip Coil 2;
- Close CB-9006 ;
- Close CB-9007;
- Open MOD 3023;
- Close MOD 3023 ;
- Trip CB-947 (69kV) Trip Coil 2 (Via Mirrored Bits-Reserved if Mirrored Bits Channel is not available); and
- Close CB-947 (69kV) (Via Mirrored Bits-Reserved if Mirrored Bits Channel is not available).

The following inputs will need to be wired to the SEL 487E relay:

- CB-9006 Trip Circuit 2 Supervision (Reserved);
- CB-9007 Trip Circuit 2 Supervision (Reserved);
- 43-52CS for Open CB-9006;
- 43-52CS for Close CB-9006;
- 43-52CS for Open CB-9007;
- 43-52CS for Close CB-9007;
- 43-52CS for Open CB-947;
- 43-52CS for Close CB-947;
- 43-89CS for Open MOD 3023;

- 43-89CS for Close MOD 3023;
- CB-9006 52a;
- CB-9006 52b;
- CB-9007 52a;
- CB-9007 52b;
- CB-947 52a;
- CB-947 52b;
- MOD 3023 -89a;
- MOD 3023 -89b;
- GS 3024-57b;
- 43L/R-L CB-9006;
- 43L/R-L CB-9007;
- 43L/R-L CB-947;
- 43L/R-L MOD 3023;
- 86T X3/B Status; and
- 86T X3/B Coil Monitoring.

BFI includes the following inputs:

- BFI from SEL451 Transformer Back up Protection for BF of CB-9006 and CB-9007;
- BFI from SEL487B "B" Bus Bar 1 Protection for BF of CB-9006;
- BFI from Group "A" Bus Bar 1 Protection for BF of CB-9006 (Provision only);
- BFI from SEL411L "B" Protection of Cable C3 for BF of CB-9007;
- BFI from GE D60 "A" Protection of Cable C3 for BF of CB-9007;
- BFI from 69kV yard (Reserved- If Mirrored Bits not available); and
- 27DC (The last input of the relay).

The following normal outputs will need to be wired to the SEL 487E relay:

- Trip 86T X3/B;
- Block Close CB-9006;
- Block Close CB-9007;
- Block Close CB-947 (69kV);
- Block Close CB CB-9003;
- Block Close CB CB-9000;
- Block Close CB CB-9008;
- Block Close CB CSW-R3;
- Close MOD 3023;
- Open MOD 3023;

- DTT to ALT Send for Cable C3;
- DTT to ALT Send for Cable C3 (Reserved for three terminal scheme);
- Enable/Disable the Control IED (SEL 2440); and
- Relay Failure.

The following high interrupting outputs will need to be wired to the 487E relay:

- Trip CB-9006 or BF Trip of CB-9007 or CB-947 to Trip Coil 2;
- Trip CB-9007 or BF Trip of CB-9006 or CB-947 to Trip Coil 2;
- Reserved;
- Reserved;
- Close CB-9006;
- Close CB-9007;
- Reserved;
- Reserved;
- Trip CB-947 (69kV) or BF Trip of CB-9006 or CB-9007 to Trip Coil 2 (Via Mirrored Bits-Reserved if Mirrored Bits are not available);
- Close CB-947 (69kV) (Via Mirrored Bits-Reserved if Mirrored Bits are not available);
- Trip CB CB-9003 Trip Coil 2 (BF Trip of CB-9006);
- Reserved;
- Reserved;
- Trip CB CB-9000 Trip Coil 2 (BF Trip of CB-9006);
- Trip CB CB-9008 Trip Coil 2 (BF Trip of CB-9007);
- Reserved;
- Reserved; and
- Trip CB CSW-R3 Trip Coil 2 (BF Trip of CB-9007).

Metering (SEL 487E):

- 3 Phase Current;
- 3 Phase Voltage (L-G);
- Auto Transformer MW; and
- Auto Transformer MVAR.

The following inputs will need to be wired to the SEL 451 relay:

- CB-9006 Trip Circuit 2 Supervision (Reserved); and
- CB-9007 Trip Circuit 2 Supervision (Reserved).

The following high interrupting outputs will need to be wired to the SEL 451 relay:

- Trip CB-9006 Trip Coil 2;

- Trip CB-9007 Trip Coil 2;
- Reserved;
- Reserved; and
- Trip CB-947 (69kV) Trip Coil 2 (Via Mirrored Bits- Reserved if Mirrored Bits are not available.).

The following normal outputs will need to be wired to the SEL 451 relay:

- Trip 86T X3/B;
- BFI to SEL 487E for CB 9006, CB 9007 and CB 947; and
- Relay failure.

4.1.2.2 138/69kV Auto Transformer X3 "A" Protection (provision only)

The control building shall be provided with the provision of adding a "A" protection cabinet for autotransformer X3 in a proper place in the future.

4.1.2.3 138 kV Cable C3 "B" Protection, CB-9007 and CB-9008 Prot. &Control

SEL411L to be used as "B" Protection for Cable C3 including 87L,59 , 21P, 21G, 67G. Permissive Over reach Transfer Trip (POTT) send and received to Memramcook through RFL IMUX Multiplexer, the T1 line and Microwave. The corresponding relay at Memramcook will also be a SEL 411L.

In case of any fault in the zone of the Carrier Assisted Distance Protection, an external latch relay (86C3/B) will lock out the trips on the line breakers and blocks any breaker closing until the cause of the failure is cleared and the investigation is complete which at that time the 86C3/B can be reset and cable can be energized.

In case of any fault in the zone of differential (87L) an external latch relay (86C3/B) will lock out the trips on the line breakers and blocks any breaker closing until the cause of the failure is cleared and the investigation is complete which at that time the A86L can be reset and cable can be energized.

In case of any fault detection, the 50BF elements and the BF Logic for CB-9008 will be initiated internally by any protection element operated and externally by Bus 2 "B" protection. The breaker failure operation of CB-9008 will energize 86BFC3/B latch bit of this breaker which in turn will trip and latches trips on all local adjacent breakers as well as block closing of these breakers. In case of a breaker failure, "B" Protection will also send Direct Transfer Trip (DTT) to Memramcook for tripping any remote breaker. The DTT will be sent through RFL IMUX Multiplexer, the T1 line and Microwave. Likewise, any DTT received from Memramcook through RFL IMUX Multiplexer, the T1 line and Microwave will trip the CB-9008 and CB-9007. The POTT and DTT shall be able to be Enabled and Disabled using the programmable push buttons on the front panel of the relay through the relay settings.

All elements of SEIL411L "B" Protection shall send Breaker Failure Initiation (BFI) to the SEL487E relay of auto transformer X3 which includes the Breaker Failure Protection for CB-9007 and to SEL 487E of Reactor R3 which includes the circuit switcher CSW-R3 failure of Reactor R3.

The LLDB, LBDL and 25 elements for synch check of CB-9007 and CB-9008 will check the voltages across theses breakers and provide close permission for any local closing by the corresponding control switch or for any remote closing through SCADA or HMI.

Prior to Transmission Line 1244 is constructed, 1143 will feed Cable C3 and C4 as a three (3) terminal systems. A three (3) terminal differential (411L) and POTT are required as showing in the drawings attached in Appendix 7. Once Transmission Line1244 is in service, Transmission Line1244 will feed Cable C4 and Transmission Line 1143 will feed Cable C3. After Transmission Line 1244 is in service, in the event that one (1) overhead line has to feed two (2) cables, only POTT will be in service for both protection A and protection B. Different relay group settings shall be provided for each of the line/cable configurations described earlier.

The relay logic and the settings shall allow for a cable overload protection using overcurrent elements. Provided that there is no on-island generation, the power flow is from NB to PEI through the cables. However, the cables might be overloaded due to the on-island generations, including wind, thermal, etc. in the future. Different actions may need to be carried out when the cables are overloaded by the generation. The details of this Special Protection Scheme (SPS) are not known at this time however the design shall allow for this special protection. Once cable is overloaded, depending upon the power flow direction, certain load shedding will need to take place. The P&C in Borden may need to interface with NB Power's (SPS) as well.

A SEL 2440 will be used as breaker I/O module which will be installed in the control cabinet of each breaker. The breaker I/O module will communicate with RTAC. The SEL 2440 will be connected to RTAC through dual Ethernet fiber ports, multimode 62.5 µm fiber optic cables and Ethernet managed switches. Even though SEL 2440 will be able to close and open the breaker, this function will be used in the future when IEC 61850 is implemented.

Another SEL 2440 relay will be used in the PCT building Group B panel and will be used as a control IED when the SEL 487E is out of service due to maintenance.

For the inputs and outputs of the SEL 2440 as Remote I/O Module for CB-9007 refer to section 4.1.2.1:

The following inputs will need to be wired to the SEL 2440 as Remote I/O Module for CB-9008:

- CB-9008- 52a;
- CB-9008-52b;
- CB-9008 43R/L-R;
- CB-9008 63P-1(SF6 Low Pressure Alarm;
- CB-9008 63T (SF6 Low Pressure Lock out);
- CB-9008 Trip Coil 1 Failure;
- CB-9008 Trip Coil 2 Failure;
- CB-9008 Loss of Spring Charge Motor Voltage;
- CB-9008 Spring Charge Failure;
- CB-9008 Close Spring Charge Failure;
- CB-9008 Loss of AC Supply;

- CB-9008 Loss of Heater Voltage;
- CB-9008 Loss of DC supply power (The last input of the relay);
- Output for CB-9008 Close; and
- Output for CB-9008 Open.

The following inputs will need to be wired to the SEL 2440 as Remote I/O Module for 89-3028:

- 89-3028- 89a;
- 89-3028-89b;
- 89-3028 43R/L-R;
- 57-3029-57a;
- 57-3029-57b;
- Motor thermal overload;
- Loss of AC power supply;
- Loss of heater voltage;
- 89-3028 Loss of DC supply power (The last input of the relay);
- Output for 89-3028 Close; and
- Output for 89-3028 Open.

The following inputs will need to be wired to the SEL 2440 relay, the local control IED in the "B" Group:

- Control Enable/Disable (Activation Input by SEL411L);
- 43-52CS for Open CB-9008;
- 43-52CS for Close CB-9008;
- 43-89CS for Open MOD 3028;
- 43-89CS for Close MOD 3028;
- CB-9008 52a;
- CB-9008 52b;
- CB-9007 52a;
- CB-9007 52b;
- MOD 3028 -89a;
- MOD 3028 -89b;
- 43L/R-L CB-9008;
- 43L/R-L CB-9007;
- 43L/R-L MOD 3028;
- GS 3029-57b;
- 86C3/B Status; and
- 27DC (The last input of the relay).

The following outputs of SEL 2440 relay as the local control IED in the "B" Group will need to be wired to the equipment:

- Trip CB-9008 Trip Coil 2;
- Reserved;
- Reserved;
- Trip CB-9007 Trip Coil 2;
- Reserved;
- Reserved;
- Close CB-9008;
- Reserved;
- Reserved;
- Close CB-9007;
- Reserved;
- Reserved;
- Open MOD 3028; and
- Close MOD 3028.

The following inputs will need to be wired to the 411L relay:

- CB-9008 Trip Circuit 2 Supervision (Reserved);
- 43-52CS for Open CB-9008;
- 43-52CS for Close CB-9008;
- 43-89CS for Open MOD 3028;
- 43-89CS for Close MOD 3028;
- 43L/R-L CB 9008;
- 43L/R-L MOD 3028;
- MOD 3028 -89a;
- MOD 3028 -89b;
- GS 3029-57b;
- 86C3/B Status;
- 86C3/B Coil Monitoring;
- BFI from SEL487B "B" Bus Bar 2 Protection for BF of CB-9008;
- BFI from Group "A" Bus Bar 2 Protection for BF of CB-9008 (Provision only);
- BFI from GE D60 "A" Protection of Cable C3 for BF of CB-9008;
- CB-9008-52a;
- CB-9008-52b;

- CB-9007-52a;
- CB-9007-52b;
- CSW-R3-52a;
- CSW-R3-52b;
- DTT from Alt Received for Cable C3 IEEE C37.94 (Reserved);
- DTT from ALT Received for Cable C3 IEEE C37.94 (Reserved for three terminal scheme);
- POTT from Alt Received for Cable C3 IEEE C37.94 (Reserved);
- POTT from ALT Received for Cable C3 IEEE C37.94(Reserved for three terminal scheme); and
- 27 VDC Loss of Voltage (the last input of the relay).

The following high interrupting outputs will need to be wired to the SEL 411L relay:

- Trip CB-9008 Trip Coil 2;
- Reserved;
- Reserved;
- Trip CB-9007 and BF Trip of CB 9008 to Trip Coil 2;
- Reserved;
- Reserved;
- Close CB-9008;
- Reserved;
- Reserved;
- Close CB-9007;
- Reserved;
- Reserved;
- Trip CSW-R3 Reactor CSW and BF Trip of CB 9008 to Trip Coil 2;
- Trip CB CB-9002 Trip Coil 2 (BF Trip of CB-9008); and
- Trip CB CB-9005 Trip Coil 2 (BF Trip of CB-9008).

The following normal outputs will need to be wired to the SEL 411L relay:

- 86C3/B Trip;
- Relay Failure;
- Block Close CB-9008;
- Block Close CB-9007;
- Block Close CSW-R3;
- Block Close CB-9002;
- Block Close CB-9005;

- Close MOD 3028;
- Open MOD 3028;
- DTT to Alt for Cable C3 IEEE C37.94 (Reserved);
- DTT to ALT for Cable C3 IEEE C37.94(Reserved for three terminal scheme);
- POTT to Alt for Cable C3 IEEE C37.94 (Reserved);
- POTT to ALT for Cable C3 IEEE C37.94(Reserved for three terminal scheme);
- BFI to SEL487E "B" Protection BF of CB-9007;
- BFI to Reactor "B" Protection BF for CSW-R3; and
- Control Enable/Disable (Activation Output to SEL2440- the control IED).

Metering (411L):

- 3 Phase Current;
- 3 Phase Voltage (L-G);
- Cable C3 (MW); and
- Cable C3 (MVAR).

4.1.2.4 138 kV Cable C3 "A" Protection

GE D60 relay shall be used as "A" Protection for Cable#3, including 21P, 21G, 59, 67G elements. Permissive Ove reach Transfer Trip (POTT) send and received to Memramcook through RFL IMUX Multiplexer, the T1 line and Microwave. The corresponding relay at Memramcook will also be a GE D60.

In case of any fault in the zone of the Carrier Assisted Distance Protection, an external latch relay (86C3/A) will lock outs the trips on the line breakers and blocks any breaker closing until the cause of the failure is cleared and the investigation is complete which at that time the 86C3/A can be reset and cable can be energized.

In case of any fault detection, the 50BF elements and the BF Logic for CB-9008 will be initiated internally by any protection element operated. The breaker failure operation of CB-9008 will energize 86BFC3/A latch bit of this breaker which in turn will trip and latches trips on all local adjacent breakers as well as block closing of these breakers. In case of a breaker failure, "A" Protection will also send Direct Transfer Trip (DTT) to Memramcook for tripping any remote breaker. The DTT will be sent through RFL IMUX Multiplexer, the T1 line and Microwave. Likewise, any DTT received from Memramcook through RFL IMUX Multiplexer, the T1 line and Microwave will trip the CB-9008 and CB-9007. The POTT and DTT shall be able to be Enabled and Disabled using the programmable push buttons on the front panel of the relay through the relay settings.

All elements of GE D60 "A" Protection shall send Breaker Failure Initiation (BFI) to the future "A" Group relays of X3, C3 and R3 relays which include the Breaker Failure Protection for CB-9007, CB-9008 and CSW-R3. The POTT and DTT shall be able to be Enabled and Disabled using the programmable push buttons on the front panel of the relay through the relay settings.

The following inputs will need to be wired to the GE D60 relay:

- 86C3/A Status;
- 86C3/A Coil Monitoring;

- CB-9008-52a;
- CB-9008-52b;
- CB-9007-52a;
- CB-9007-52b;
- CSW-R3-52a;
- CSW-R3-52a;
- DTT Received from Main for Cable C3;
- DTT Received from Main for Cable C3 (Reserved for three terminal scheme);
- POTT Received from Main for Cable C3;
- POTT Received from Main for Cable C3 Reserved for three terminal scheme);
- BFI from BB2-87B SEL487B;
- BFI from Group "A" Bus 2 (Reserved); and
- 27 VDC Loss of Voltage (the last input of the relay).

The following high interrupting outputs will need to be wired to the GE D60:

- Trip CB-9008 Trip Coil 1;
- Reserved;
- Reserved;
- Trip CB-9007 and BF Trip of CB-9008 to Trip Coil 1;
- Reserved;
- Reserved;
- Trip CSW-R3 Trip Coil 1 and BF Trip for CB-9008;
- Trip CB 9002 Trip Coil 1 (BF Trip of CB 9008); and
- Trip CB 9005 Trip Coil 1 (BF Trip of CB 9008).

The following normal outputs will need to be wired to the GE D60 relay:

- 86C3/A Trip;
- Block close CB 9008;
- Block Close CB 9007;
- Block Close CSW-R3;
- Block Close CB 9002;
- Block Close CB 9005;
- DTT to Main for Cable C3;
- DTT to Main for Cable C3 (Reserved for three terminal scheme);
- POTT to Main for Cable C3;
- POTT to Main for Cable C3 (Reserved for three terminal scheme);

- BFI to SEL 487E for BF CB-9007 (later on will be used for X3 Group "A" Protection);
- BFI to SEL487E of R3 for CSW-R3 (later on will be used for R3 Group "A" Protection); and
- Relay failure.

4.1.2.5 138 kV Reactor R3 "B" Protection, CSW-R3 Prot. & Control

There shall be one (1) protection cabinet for "B" and Back up protection. SEL487E to be used as "B" Protection for Reactor including 50/51on the line side of the winding and 50/51G on the neutral, Differential 87T, Negative Sequence Differential 87Q for protection against windings turn to turn faults, Restricted Ground Differential 87G and Under and Over Voltage Protection. All reactor mechanical protections (Alarm and Trips) such as 49T, 26Q, 63P, 63T and 71Q to be wired to the digital inputs of the SEL2414 relay. This relay will be installed in the control cabinet of the reactor. In case of a serious internal fault detected by 63T, the SEL 2414 will send trip via Mirrored Bits to SEL 451 Reactor Back up Protection. In case of any serious internal fault (87T, 87Q, 87G and 63T), SEL487E and SEL 451 will energize 86R3/B Reactor Lock Out Relay which latches the trips on the reactor circuit switcher and blocks its closing until the cause of the failure is cleared and the investigation is complete which at that time the 86R3/B can be reset.

In case of any fault detection, the 50BF elements and the BF Logic for reactor circuit switcher which will be embedded in the SEL 487E will be initiated internally by any protection element operated and externally by SEL411L. The breaker failure operation will energize 86BFR3/B an internal latch bit of the relay which in turn will trip and latches trips on all local adjacent breakers as well as block closing of these breakers.

The relay provides close contact so that any remote closing of the reactor breaker can be achieved.

A SEL 2440 will be used as circuit switcher I/O module which will be installed in the control cabinet of the circuit switcher. The I/O module will communicate with RTAC SEL 3530. The SEL 2440 will be connected to RTAC through dual Ethernet fiber ports, multimode 62.5 µm fiber optic cables and Ethernet managed switches. Even though SEL 2440 will be able to close and open the breaker, this function will be used in the future when IEC 61850 is implemented.

The following inputs will need to be wired to the SEL 2414 relay:

- 26Q (90°C);
- 26Q (105°C);
- 26Q (RTD/Analog Input);
- 49T (105°C);
- 49T (135°C);
- 49T (RTD/Analog Input);
- 71Q-1;
- 71Q-2;
- 71Q-3;
- 71Q (RTD/Analog In);
- 63P;
- 63T;

- 27AC; and
- 27DC (Last input of the relay).

The following inputs will need to be wired to the SEL 2440 as Remote I/O Module for CSW-R3:

- CSW-R3- 52a;
- CSW-R3-52b;
- CSW-R3-43R/L-R;
- CSW-R3-63P-1(SF6 Low Pressure Alarm);
- CSW-R3-63T (SF6 Low Pressure Lock out);
- CSW-R3-Trip Coil 1 Failure;
- CSW-R3-Trip Coil 2 Failure;
- CSW-R3-Loss of Spring Charge Motor Voltage;
- CSW-R3-Spring Charge Failure;
- CSW-R3-Close Spring Charge Failure;
- CSW-R3-Loss of AC Supply;
- CSW-R3-Loss of Heater Voltage;
- CSW-R3-Loss of DC supply power (The last input of the relay);
- Output for CSW-R3 Close; and
- Output for CSW-R3 Open.

The following inputs will need to be wired to the SEL 2440 relay, the local control IED in the "B" Group:

- Control Enable/Disable (Activation Input by SEL487E);
- 43-52CS for Open CSW-R3;
- 43-52CS for Close CSW-R3;
- CSW-R3 52a;
- CSW-R3 52b;
- 43L/R-L CSW-R3;
- 86R3/B Status; and
- 27DC (The last input of the relay).

The following outputs of SEL 2440 relay will need to be wired to the local control IED in the "B" Group:

- Trip CSW-R3 Trip Coil 2; and
- Close CSW-R3.

The following inputs will need to be wired to the SEL 487E relay:

- CSW-R3 Trip Circuit 2 Supervision (Reserved);

- 43-52CS for Open CSW-R3;
- 43-52CS for Close CSW-R3;
- 43L/R-L CSW-R3;
- CSW-R3-52a;
- CSW-R3-52b;
- 86R3/B Status;
- 86R3/B Coil Monitoring;
- BFI from SEL451 Reactor Back up Protection for BF of CSW-R3;
- BFI from SEL411L "B" Protection of Cable C3 for BF of CSW-R3;
- BFI from GE D60 "A" Protection of Cable C3 for BF of CSW-R3 (Reserved);
- DTT Received from ALT for Cable C3;
- DTT Received from ALT for Cable C3 (Reserved for three terminal scheme); and
- 27DC (The last input of the relay).

The following normal outputs will need to be wired to the SEL 487E relay:

- Trip 86R3/B;
- Block Close CSW-R3;
- Block Close CB CB-9007;
- Block Close CB CB-9008;
- DTT to ALT for Cable C3;
- DTT to ALT for Cable C3 (Reserved for three terminal scheme);
- Reserved for BFI;
- Reserved for BFI;
- Control Enable/Disable (Activation output to SEL 2440 the control IED); and
- Relay Failure.

The following high interrupting outputs will need to be wired to the SEL487E relay:

- Trip CSW-R3 Trip Coil 2;
- Close CSW-R3;
- Trip CB CB-9007Trip Coil 2 (BF Trip of CSW-R3);
- Reserved;
- Reserved;
- Trip CB CB-9008 Trip Coil 2 (BF Trip of CSW-R3);
- Reserved; and
- Reserved.

Metering (SEL 487E):

- 3 Phase Current;
- 3 Phase Voltage (L-G);
- Reactor R3 MW; and
- Reactor R3 MVAR.

The following inputs will need to be wired to the SEL 451 relay:

- CSW-R3 Trip Circuit 2 Supervision (Reserved); and
- 27DC (The last input of the relay).

The following high interrupting outputs will need to be wired to the SEL 451 relay:

- Trip CSW-R3 Trip Coil 2.

The following normal outputs will need to be wired to the SEL 451 relay:

- Trip 86R3/B;
- BFI to SEL 487E Reactor "B" Protection for CSW-R3 BF;
- Reserved for BFI;
- Reserved for BFI; and
- Relay failure.

4.1.2.6 138 kV Reactor R3 "A" Protection, CSW-R3 Prot. & Control

The control building shall be provided with the provision of adding a "A" protection cabinet for Reactor R3 in a proper place in the future.

4.1.2.7 138 kV "Main" and "Alternate" Teleprotection for Cable C3 and Cable C4 to Memramcook

The main and the alternate paths for microwave communication between Borden and Memramcook for the purpose of teleprotection will be through two (2) different routes.

1. Route #1: Memramcook, Murray Corner, Bedeque, Borden; and
2. Rout#2: Memramcook, Melrose, Green Road, Borden.

On Cable C3

- B87L Line Differential C37.94 on ALT for Cable C3;
- B87L Line Differential C37.94 on ALT for Cable C3 (Reserved for three terminal scheme);
- DTT (A) from Main Received for Cable C3;
- DTT (A) Send to Main for Cable C3;
- DTT (A) from Main Received for Cable C3 (Reserved for three terminal scheme);
- DTT (A) Send to Main for Cable C3 (Reserved for three terminal scheme);
- POTT (A) from Main Received for Cable C3;
- POTT (A) Send to Main for Cable C3;

- POTT (A) from Main Received for Cable C3 (Reserved for three terminal scheme);
- POTT (A) Send to Main for Cable C3 (Reserved for three terminal scheme);
- DTT (B) from ALT Received for Cable C3;
- DTT (B) Send to ALT for Cable C3;
- DTT (B) from ALT Received for Cable C3 (Reserved for three terminal scheme);
- DTT (B) Send to ALT for Cable C3 (Reserved for three terminal scheme);
- POTT (B) from ALT Received for Cable C3;
- POTT (B) Send to ALT for Cable C3;
- POTT (B) from ALT Received for Cable C3 (Reserved for three terminal scheme);
- POTT (B) Send to ALT for Cable C3 (Reserved for three terminal scheme);
- Cable Over Load Received from ALT for Cable C3 (Reserved);
- Cable Over Load Send to ALT for Cable C3 (Reserved);
- SPS Received from Main for Cable C3 (Reserved); and
- SPS Send to Main for Cable C3 (Reserved).

On Cable C4

- B87L Line Differential C37.94 on ALT for Cable C4;
- B87L Line Differential C37.94 on ALT for Cable C4 (Reserved for three terminal scheme);
- DTT (A) from Main Received for Cable C4;
- DTT (A) Send to Main for Cable C4;
- DTT (A) from Main Received for Cable C4 (Reserved for three terminal scheme);
- DTT (A) Send to Main for Cable C4 (Reserved for three terminal scheme);
- POTT (A) from Main Received for Cable C4;
- POTT (A) Send to Main for Cable C4;
- POTT (A) from Main Received for Cable C4 (Reserved for three terminal scheme);
- POTT (A) Send to Main for Cable C4 (Reserved for three terminal scheme);
- DTT (B) from ALT Received for Cable C4;
- DTT (B) Send to ALT for Cable C4;
- DTT (B) from ALT Received for Cable C4 (Reserved for three terminal scheme);
- DTT (B) Send to ALT for Cable C4 (Reserved for three terminal scheme);
- POTT (B) from ALT Received for Cable C4;
- POTT (B) Send to ALT for Cable C4;
- POTT (B) from ALT Received for Cable C4 (Reserved for three terminal scheme);
- POTT (B) Send to ALT for Cable C4 (Reserved for three terminal scheme);
- Cable Over Load Received from ALT for Cable C4 (Reserved);

- Cable Over Load Send to ALT for Cable C4 (Reserved);
- SPS Received from Main for Cable C4 (Reserved); and
- SPS Send to Main for Cable C4 (Reserved).

4.1.2.8 138 kV Cable C4 "B" Protection, CB-9003 and CB-9004 Prot. &Control

SEL411 to be used as "B" Protection for Cable#4 including line differential 87L, 59 , 21P, 21G, 67G. Permissive Ove reach Transfer Trip (POTT) send and received to Memramcook through RFL IMUX Multiplexer, the T1 line and Microwave. The corresponding relay at Memramcook will also be a SEL 411L.

In case of any fault in the zone of the Carrier Assisted Distance Protection, an external lock out relay (86C4/B) will lock out the trip on the line breakers and blocks any breaker closing until the cause of the failure is cleared and the investigation is complete which at that time the 86C4/B can be reset and cable can be energized.

In case of any fault in the zone of differential (87L) an external lock out relay (86C4/B) will lock out the trip on the line breakers and blocks any breaker closing until the cause of the failure is cleared and the investigation is complete which at that time the 86C4/B can be reset and cable can be energized.

In case of any fault detection, the 50BF elements and the BF Logic for CB-9003 will be initiated internally by any protection element operated and externally by Bus 1 "B" protection. The breaker failure operation of CB-9003 will energize 86BFC4/B latch bit for this breaker which in turn will trip and latches trip on all local adjacent breakers as well as block closing of these breakers. In case of a breaker failure, "B" Protection will also send Direct Transfer Trip (DTT) to Memramcook for tripping any remote breaker. The DTT will be sent through RFL IMUX Multiplexer, the T1 line and Microwave. Likewise, any DTT received from Memramcook through RFL IMUX Multiplexer, the T1 line and Microwave will trip the CB-9003, CB-9004 and the Reactor R4 Circuit Breaker CSW-R4. The POTT and DTT shall be able to be Enabled and Disabled using the programmable push buttons on the front panel of the relay through the relay settings.

All elements of SEIL411L "B" Protection shall send Breaker Failure Initiation (BFI) to the SEL421 relay of Y113 which includes the Breaker Failure "B" Protection for CB-9004 and also (BFI) to the SEL487E relay which includes the Breaker Failure "B" Protection for CSW-R4 circuit switcher of Reactor R4.

The LLDB, LBDL and 25 elements for synch check of CB-9003 and CB-9004 will check the voltages across theses breakers and provide close permission for any local closing by the corresponding control switch or for any remote closing through SCADA or HMI.

Prior to Transmission Line 1244 is constructed, 1143 will feed Cable three (3) and four (4) as a three (3) terminal systems. A three (3) terminal differential (411L) and POTT are required as showing in the drawings attached in Appendix 7. Once Transmission Line1244 is in service, Transmission Line1244 will feed Cable four (4) and Transmission Line 1143 will feed Cable three (3). In the event that one overhead line has to feed two (2) cables, only POTT will be in service for both protection A and protection B. Different relay group settings shall be provided for each of the line/cable configurations described earlier.

The relay logic and the settings shall allow for a cable overload protection using overcurrent elements. Provided that there is no on-island generation, the power flow is from NB to PEI through the cables. However, the cables might be overloaded due to the on-island generations, including wind, thermal, etc. in the future. Different actions may need to be carried out when the cables are overloaded by the generation. The details of this Special Protection Scheme (SPS) are not known at this time however the design shall allow for this special

protection. Once cable is overloaded, depending upon the power flow direction, certain load shedding will need to take place. The P&C in Borden may need to interface with NB Power's (SPS) as well.

A SEL 2440 will be used as breaker I/O module which will be installed in the control cabinet of each breaker. The breaker I/O module will communicate with RTAC. The SEL 2440 will be connected to RTAC through dual Ethernet fiber ports, multimode 62.5 µm fiber optic cables and Ethernet managed switches. Even though SEL 2440 will be able to close and open the breaker, this function will be used in the future when IEC 61850 is implemented.

The following inputs will need to be wired to the SEL 2440 as Remote I/O Module for CB-9003:

- CB-9003- 52a;
- CB-9003-52b;
- CB-9003 43R/L-R;
- CB-9003 63P-1(SF6 Low Pressure Alarm;
- CB-9003 63T (SF6 Low Pressure Lock out);
- CB-9003 Trip Coil 1 Failure;
- CB-9003 Trip Coil 2 Failure;
- CB-9003 Loss of Spring Charge Motor Voltage;
- CB-9003 Spring Charge Failure;
- CB-9003 Close Spring Charge Failure;
- CB-9003 Loss of AC Supply;
- CB-9003 Loss of Heater Voltage;
- CB-9003 Loss of DC supply power (The last input of the relay);
- Output for CB-9003 Close;
- Output for CB-9003 Open;
- Output for MOD-3013 Close; and
- Output for MOD-3013 Open.

For the inputs and outputs of the SEL 2440 as Remote I/O Module for CB-9004 refer to section 4.1.2.12:

The following inputs will need to be wired to the SEL 2440 as Remote I/O Module for 89-3013:

- 89-3013- 89a;
- 89-3013-89b;
- 89-3013 43R/L-R;
- 57-3014-57a;
- 57-3014-57b ;
- Motor thermal overload;
- Loss of AC power supply;

- Loss of heater voltage;
- 89-3013 Loss of DC supply power (The last input of the relay);
- Output for 89-3013 Close; and
- Output for 89-3013 Open.

The following inputs will need to be wired to the SEL 2440 relay, the local control IED in the "B" Group:

- Control Enable/Disable (Activation Input by SEL411L);
- 43-52CS for Open CB-9003;
- 43-52CS for Close CB-9003;
- 43-89CS for Open MOD 3013;
- 43-89CS for Close MOD 3013;
- CB-9003 52a;
- CB-9003 52b;
- CB-9004 52a;
- CB-9004 52b;
- MOD 3013 -89a;
- MOD 3013 -89b;
- 43L/R-L CB-9003;
- 43L/R-L MOD 3013;
- GS 3014-57b;
- 86C4/B Status; and
- 27DC (The last input of the relay).

The following outputs of SEL 2440 relay as the local control IED in the "B" Group will need to be wired to the equipment:

- Trip CB-9003 Trip Coil 2;
- Reserved;
- Reserved;
- Trip CB-9004 Trip Coil 2;
- Reserved;
- Reserved;
- Close CB-9003;
- Reserved;
- Reserved;
- Close CB-9004;
- Reserved;

- Reserved;
- Open MOD 3013; and
- Close MOD 3013.

The following inputs will need to be wired to the 411L relay:

- CB-9003 Trip Circuit 2 Supervision (Reserved);
- 43-52CS for Open CB-9003;
- 43-52CS for Close CB-9003;
- 43-89CS for Open MOD 3013;
- 43-89CS for Close MOD 3013;
- 43L/R-L CB 9003;
- 43L/R-L MOD 3013;
- MOD 3013 -89a;
- MOD 3013 -89b;
- GS 3014-57b;
- 86C4/B Status;
- B86C4/B Coil Monitoring;
- BFI from SEL487B "B" Bus Bar 1 Protection for BF of CB-9003;
- BFI from Group "A" Bus Bar 1 Protection for BF of CB-9003 (Provision only);
- BFI from GE D60 "A" Protection of Cable C4 for BF of CB-9003;
- CB-9003-52a;
- CB-9003-52b;
- CB-9004-52a;
- CB-9004-52b;
- CSW-R4-52a;
- CSW-R4-52b;
- DTT from ALT Received for Cable C4 IEEE C37.94 (Reserved);
- DTT from ALT Received for Cable C4 IEEE C37.94 (Reserved for three terminal scheme);
- POTT from ALT Received for Cable C4 IEEE C37.94 (Reserved);
- POTT from ALT Received for Cable C4 IEEE C37.94 (Reserved for three terminal scheme); and
- 27 VDC Loss of Voltage (the last input of the relay).

The following high interrupting outputs will need to be wired to the SEL 411L relay:

- Trip CB-9003 Trip Coil 2;
- Reserved;
- Reserved;

- Trip CB-9004 Trip & BF Trip (BF Trip of CB-9003) to Coil 2;
- Reserved;
- Reserved;
- Close CB-9003;
- Reserved;
- Reserved;
- Close CB-9004;
- Reserved;
- Reserved;
- Trip CSW-R4 Reactor CSW Trip Coil 2 and BF Trip of CB-9003;
- Trip CB-9000 Trip Coil 2 (BF Trip of CB-9003); and
- Trip CB-9006 Trip Coil 2 (BF Trip of CB-9003).

The following normal outputs will need to be wired to the SEL 411L relay:

- 86C4/B Trip;
- Relay Failure;
- Block Close CB-9006;
- Block Close CB-9004;
- Block Close CSW-R4;
- Block Close CB CB-9000;
- Block Close CB CB-9003;
- Close MOD 3013;
- Open MOD 3013;
- DTT to ALT for Cable #4 IEEE C37.94 (Reserved);
- DTT to ALT for Cable #4 IEEE C37.94 (Reserved for three terminal scheme);
- POTT to ALT for Cable #4 IEEE C37.94 (Reserved);
- POTT to ALT for Cable #4 IEEE C37.94 (Reserved for three terminal scheme);
- BFI to SEL421 "B" Protection BF of CB-9004;
- BFI to Reactor "B" Protection for CSW-R4 BF; and
- Control Enable/Disable (Activation Output to SEL2440- the control IED).

Metering (411L):

- Three (3) Phase Current;
- Three (3) Phase Voltage (L-G);
- Cable C4 (MW); and
- Cable C4 (MVAR).

4.1.2.9 138 kV Cable C4 "A" Protection

GE D60 relay shall be used as "A" Protection for Cable C4, including 21P, 21G, 59, 67G elements. Permissive Over reach Transfer Trip (POTT) send and received to Memramcook through RFL IMUX Multiplexer, the T1 line and Microwave. The corresponding relay at Memramcook will also be a GE D60.

In case of any fault in the zone of the Carrier Assisted Distance Protection, an external lock out relay (86C4/A) will lock outs the trips on the line breakers and blocks any breaker closing until the cause of the failure is cleared and the investigation is complete which at that time the 86C4/A can be reset and cable can be energized.

In case of any fault detection, the 50BF elements and the BF Logic for CB-9003 will be initiated internally by any protection element operated. The breaker failure operation of CB-9003 will energize 86BFC4/A latch bit of this breaker which in turn will trip and latches trips on all local adjacent breakers as well as block closing of these breakers. In case of a breaker failure, "A" Protection will also send Direct Transfer Trip (DTT) to Memramcook for tripping any remote breaker. The DTT will be sent through RFL IMUX Multiplexer, the T1 line and Microwave. Likewise, any DTT received from Memramcook through RFL IMUX Multiplexer, the T1 line and Microwave will trip the CB-9003 and CB-9004. The POTT and DTT shall be able to be Enabled and Disabled using the programmable push buttons on the front panel of the relay through the relay settings.

All elements of GE D60 "A" Protection shall send Breaker Failure Initiation (BFI) to the future "A" Group relays of Y113 and R4 which will include the "A" Group Breaker Failure Protection for CB-9004, CB-9003 and CSW-R4.

The following inputs will need to be wired to the GE D60 relay:

- 86C4/A Status;
- 86C4/A Coil Monitoring;
- CB-9003-52a;
- CB-9003-52b;
- CB-9004-52a;
- CB-9004-52b;
- CSW-R4-52a;
- CSW-R4-52b;
- DTT Received from Main for Cable C4;
- DTT Received from Main for Cable C4 (Reserved for three terminal scheme);
- POTT Received from Main for Cable C4;
- POTT Received from Main for Cable C4 (Reserved for three terminal scheme);
- BFI from BB1-87B SEL 487B;
- BFI from Group "A" Bus 1 (Reserved); and
- 27 VDC Loss of Voltage (the last input of the relay).

The following high interrupting outputs will need to be wired to the GE D60:

- Trip CB-9003 Trip Coil 1;

- Reserved;
- Reserved;
- Trip CB-9004 Trip Coil 1 and BF Trip of CB 9003;
- Reserved;
- Reserved;
- Trip CSW-R4 Trip Coil 1 and BF Trip for CB-9003;
- Trip CB 9000 Trip Coil 1 (BF Trip of CB 9003); and
- Trip CB 9006 Trip Coil 1 (BF Trip of CB 9003).

The following normal outputs will need to be wired to the GE D60 relay:

- 86C4/A Trip;
- Block Close CB 9003;
- Block Close CB 9004;
- Block Close CSW-R4;
- Block Close CB 9000;
- Block close CB 9006;
- DTT to Main for Cable C4;
- DTT to Main for Cable C4 (Reserved for three terminal scheme);
- POTT to Main for Cable C4;
- POTT to Main for Cable C4 (Reserved for three terminal scheme);
- BFI to SEL 421 for BF CB-9004 (later on will be used for Y113 Group "A" Protection);
- BFI to SEL487E of R3 for 52-R4 (later on will be used for R4 Group "A" Protection); and
- Relay failure.

4.1.2.10 138 kV Reactor R4 "B" Protection, CSW-R4 Prot. & Control

There shall be one (1) protection cabinet for "B" and back up protection. SEL487E to be used as "B" Protection for Reactor including 50/51on the line side of the winding and 50/51G on the neutral, Differential 87, Negative Sequence Differential 87Q for protection against windings turn to turn faults, Restricted Ground Differential 87G and Under and Over Voltage Protection. All reactor mechanical protections (Alarm and Trips) such as 49T, 26Q, 63P, 63T and 71Q to be wired to the digital inputs of the SEL2414 relay. This relay will be installed in the control cabinet of the reactor. In case of a serious internal fault detected by 63T, the SEL 2414 will send trip via Mirrored Bits to SEL 451 Reactor Back up Protection. In case of any serious internal fault (87T, 87Q, 87G and 63T), SEL487E and SEL 451 will energize 86R4/B Reactor Lock Out Relay which latches the trips on the reactor circuit switcher and blocks its closing until the cause of the failure is cleared and the investigation is complete which at that time the B86R4 can be reset.

In case of any fault detection, the 50BF elements and the BF Logic for reactor circuit switcher which will be embedded in the SEL 487E will be initiated internally by any protection element operated and externally by SEL411L. The breaker failure operation will energize 86BFR4/B an internal latch bit of the relay which in turn will trip and latches trips on all local adjacent breakers as well as block closing of these breakers.

The relay provides close contact so that any remote closing of the reactor breaker can be achieved.

A SEL 2440 will be used as circuit switcher I/O module which will be installed in the control cabinet of the circuit switcher. The I/O module will communicate with RTAC SEL 3530. The SEL 2440 will be connected to RTAC through dual Ethernet fiber ports, multimode 62.5 µm fiber optic cables and Ethernet managed switches. Even though SEL 2440 will be able to close and open the breaker, this function will be used in the future when IEC 61850 is implemented.

The following inputs will need to be wired to the SEL 2414 relay:

- 26Q (90°C);
- 26Q (105°C);
- 26Q (RTD/Analog Input);
- 49T (105°C);
- 49T (135°C);
- 49T (RTD/Analog Input);
- 71Q-1;
- 71Q-2;
- 71Q-3;
- 71Q (RTD/Analog In);
- 63P;
- 63T;
- 27AC; and
- 27DC (Last input of the relay).

The following inputs will need to be wired to the SEL 2440 relay, the local control IED in the "B" Group:

- Control Enable/Disable (Activation Input by SEL487E);
- 43-52CS for Open CSW-R4;
- 43-52CS for Close CSW-R4;
- CSW-R4 52a;
- CSW-R4 52b;
- 43L/R-L CSW-R4;
- 86R4/B Status; and
- 27DC (The last input of the relay).

The following outputs of SEL 2440 relay as the local control IED in the "B" Group will need to be wired to the equipment:

- Trip CSW-R4 Trip Coil 2; and
- Close CSW-R4

The following inputs will need to be wired to the SEL 487E relay:

- CSW-R4 Trip Circuit 2 Supervision (Reserved);
- 43-52CS for Open CSW-R4;
- 43-52CS for Close CSW-R4;
- 43L/R-L CSW-R4;
- CSW-R4-52a;
- CSW-R4-52b;
- 86R4/B Status;
- 86R4/B Coil Monitoring;
- BFI from SEL451 Reactor Back up Protection for BF of CSW-R4;
- BFI from SEL411L "B" Protection of Cable C4 for BF of CSW-R4;
- BFI from GE D60 "A" Protection of Cable C4 for BF of CSW-R4 (Reserved);
- DTT Received from ALT for Cable C4;
- DTT Received from ALT for Cable C4(Reserved for three terminal scheme); and
- 27DC (The last input of the relay).

The following normal outputs will need to be wired to the SEL 487E relay:

- Trip 86R4/B;
- Block Close CSW-R4;
- Block Close CB-9004;
- Block Close CB-9003;
- DTT to ALT for Cable C4;
- DTT to ALT for Cable C4 (Reserved for three terminal scheme);
- Reserved for BFI;
- Reserved for BFI;
- Control Enable/Disable (Activation Output to SEL2440-The control IED); and
- Relay Failure.

The following high interrupting outputs will need to be wired to the 487E relay:

- Trip CSW-R4 Trip Coil 2;
- Close CSW-R4;
- Trip CB-9004 Trip Coil 2 (BF Trip of CSW-R4);
- Reserved;
- Reserved;
- Trip CB-9003 Trip Coil 2 (BF Trip of CSW-R4);
- Reserved; and

- Reserved.

Metering (SEL 487E):

- Three (3) Phase Current;
- Three (3) Phase voltage;
- Reactor R4 (MW); and
- Reactor R4 (MVAR).

The following inputs will need to be wired to the SEL 451 relay:

- CSW-R4 Trip Circuit 2 Supervision (Reserved); and
- 27DC (The last input of the relay).

The following high interrupting outputs will need to be wired to the SEL 451 relay:

- Trip CSW-R4 Trip Coil 2.

The following normal outputs will need to be wired to the SEL 451 relay:

- Trip 86R4/B;
- BFI to SEL 487E Reactor "B" Protection for CSW-R4 BF;
- Reserved for BFI;
- Reserved for BFI; and
- Relay failure.

4.1.2.11 138 kV Reactor R4 "A" Protection, CSW-R4 Prot. & Control

The control building shall be provided with the provision of adding a "A" protection cabinet for Reactor R4 in a proper place in the future.

4.1.2.12 138 kV Line Y113 "B" Protection, CB-9004 and CB-9005 Prot. &Control

Currently, MECL operates Y113 as 138kV with a SEL 311C in the existing control building. The Line Y113 in some cases has been used as 69kV line which in that case opened at both ends and connected to 69kV. A different setting on SEL 311C is used when Y113 is used as 69kV. With the new Borden substation in service, the same SEL311C in the existing control building and its 69kV settings can be used when Y113 will be in service as a 69kV line.

SEL421 is to be used as "B" Protection for Line Y113 including 21P, 21G, 67G, SOTF, POTT/DTT over existing Mirrored Bits channel.

In case of any fault detection, the 50BF elements and the BF Logic for CB-9004 and CB-9005 will be initiated internally by any protection element operated and externally by SEL 411L. The breaker failure operation of CB-9004 and CB-9005 will energize corresponding 86BF113/B latching bit of the SEL 421, which in turn will trip and latches trips on all local adjacent breakers as well as block closing of these breakers.

"B" Protection will also send Direct Transfer Trip (DTT) to the other end for tripping any remote breaker. The DTT will be sent through Mirrored Bits. Likewise, any DTT received from the other end will trip the CB-9005 and CB-9004.

The LLDB, LBDL and 25 elements for synch check of CB-9004 and CB-9005 will check the voltages across theses breakers and provide close permission for any local closing by the corresponding control switch or for any remote closing through SCADA or HMI.

Also, Line Y113 will have auto recloser (79) which will be initiated by line protection operation and will use LLDB, LBDL and synch check elements (25) to check the voltages before auto reclosing. A 43-79CS which will be wired to the inputs of the relay will be used as auto-reclose Enable/Disable.

A SEL 2440 will be used as circuit breaker I/O module which will be installed in the control cabinet of the circuit switcher. The I/O module will communicate with RTAC SEL 3530. The SEL 2440 will be connected to RTAC through dual Ethernet fiber ports, multimode 62.5 µm fiber optic cables and Ethernet managed switches. Even though SEL 2440 will be able to close and open the breaker, this function will be used in the future when IEC 61850 is implemented.

The following inputs will need to be wired to the SEL 2440 as Remote I/O Module for CB-9004:

- CB-9004- 52a;
- CB-9004-52b;
- CB-9004 43R/L-R;
- CB-9004 63P-1(SF6 Low Pressure Alarm;
- CB-9004 63T (SF6 Low Pressure Lock out);
- CB-9004 Trip Coil 1 Failure;
- CB-9004 Trip Coil 2 Failure;
- CB-9004 Loss of Spring Charge Motor Voltage;
- CB-9004 Spring Charge Failure;
- CB-9004 Close Spring Charge Failure;
- CB-9004 Loss of AC Supply;
- CB-9004 Loss of Heater Voltage;
- CB-9004 Loss of DC supply power (The last input of the relay);
- Output for CB-9004 Close; and
- Output for CB-9004 Open.

The following inputs will need to be wired to the SEL 2440 as Remote I/O Module for CB-9005:

- CB-9005- 52a;
- CB-9005-52b;
- CB-9005 43R/L-R;
- CB-9005 63P-1(SF6 Low Pressure Alarm;
- CB-9005 63T (SF6 Low Pressure Lock out);
- CB-9005 Trip Coil 1 Failure;
- CB-9005 Trip Coil 2 Failure;
- CB-9005 Loss of Spring Charge Motor Voltage;

- CB-9005 Spring Charge Failure;
- CB-9005 Close Spring Charge Failure;
- CB-9005 Loss of AC Supply;
- CB-9005 Loss of Heater Voltage;
- CB-9005 Loss of DC supply power (The last input of the relay);
- Output for CB-9005 Close; and
- Output for CB-9005 Open.

The following inputs will need to be wired to the SEL 2440 as Remote I/O Module for 89-3017:

- 89-3017- 89a;
- 89-3017-89b;
- 89-3017 43R/L-R;
- 57-3018-57a;
- 57-3018-57b;
- Motor thermal overload;
- Loss of AC power supply;
- Loss of heater voltage;
- 89-3017 Loss of DC supply power (The last input of the relay);
- Output for 89-3017 Close; and
- Output for 89-3017 Open.

The following inputs will need to be wired to the SEL 421 relay:

- CB-9005 Trip Circuit 2 Supervision (Reserved);
- CB-9004 Trip Circuit 2 Supervision (Reserved);
- 43-52CS for Open CB-9004;
- 43-52CS Close CB-9004;
- 43-52CS for Open CB-9005;
- 43-52CS for Close CB-9005;
- 43-89CS for Open MOD 3017;
- 43-89CS for Close MOD 3017;
- 43R/L-L CB 9004;
- 43R/L-L CB 9005;
- 43R/L-L MOD 3017;
- 43-79CS Auto Reclose On/Off;
- MOD 3017 -89a;
- MOD 3017 -89b;

- GS 3018-57b;
- BFI from SEL487B "B" Bus Bar 2 Protection for BF of CB-9005;
- BFI from Group "A" Bus Bar 2 Protection for BF of CB-9005 (provision only);
- BFI from SEL 411L "B" Protection of Cable C4 for CB-9004;
- BFI from GE D60 "A" Protection of Cable C4 for BF of CB-9004;
- CB-9005-52a;
- CB-9005-52b;
- CB-9004-52a;
- CB-9004-52b;
- DTT from Bedeque Received Through RS 232;
- POTT from Bedeque Received Through RS 232; and
- 27DC (The last input of the relay).

The following high interrupting outputs will need to be wired to the SEL 421 relay:

- Trip CB-9005 & BF Trip (BF Trip of CB-9004) to Trip Coil 2;
- Trip CB-9004 & BF Trip (BF Trip of CB-9005) to Trip Coil 2;
- Reserved;
- Reserved;
- Trip CB-9002 Trip Coil 2 (BF Trip of CB-9005);
- Trip CB-9008 Trip Coil 2 (BF Trip of CB-9005);
- Reserved;
- Reserved;
- Trip CB-9003 Trip Coil 2 (BF Trip of CB-9004);
- Reserved;
- Reserved;
- Trip CB CSW-R4 Trip Coil 2 (BF Trip of CB-9004);
- Close CB-9005;
- Close CB-9004;
- Reserved; and
- Reserved.

The following normal outputs will need to be wired to the SEL 421 relay:

- Relay Failure;
- Block Close CB-9005;
- Block Close CB-9004;
- Block Close CB CB-9002;

- Block Close CB CB-9008;
- Block Close CB-9003;
- Block Close CSW-R4;
- Close MOD 3017;
- Open MOD 3017;
- DTT to Main Bedeque Through RS 232; and
- POTT to Main Bedeque Through RS 232.

Metering (SEL 421):

- Three (3) Phase Currents;
- Three (3) Phase Voltages;
- Line Y113 (MW); and
- Line Y113 (MVAR).

4.1.2.13 138 kV Line 113 "A" Protection (provision only)

The control building shall be provided with the provision of adding a "A" protection cabinet for Line Y113 in a proper place in the future.

4.1.2.14 138 kV Line 107 "A" Protection, CB-9000 and CB-9001 Prot. &Control

SEL411L is to be used as "B" Protection for Line 107 including 87L, 21P, 21G, 67G, POTT, DTT (through Mirrored Bits) and SOTF. Currently, MECL is using SEL 311L for this line and is planning to change the SEL 311L relay of the other end of the line to SEL 411L in the spring of 2016. Therefore, a SEL 411L relay will be installed for this line at Borden and MECL will match the relay of the other end with Borden.

In case of any fault detection, the 50BF elements and the BF Logic for CB-9000 and CB-9001 will be initiated internally by any protection element operated and externally by Bus 1 "B" protection for CB-9000 and SEL 421 "B" Protection of Line 109 for CB-9001. The breaker failure operation of CB-9000 and CB-9001 will energize corresponding 86BF107/B latch bit of these breakers which in turn will trip and latches trips on all local adjacent breakers as well as block closing of these breakers.

"B" Protection will also send Direct Transfer Trip (DTT) to the other end for tripping any remote breaker. The DTT will be sent through Mirrored Bits. Likewise, any DTT received from the other end will trip the CB-9000 and CB-9001.

The LLDB, LBDL and 25 elements for synch check of CB-9000 and CB-9001 will check the voltages across theses breakers and provide close permission for any local closing by the corresponding control switch or for any remote closing through SCADA or HMI.

Also, Line Y107 will have auto-recloser (79) which will be initiated by line protection operation and will use LLDB, LBDL and 25 elements to check the voltages before auto reclosing. A 43-79CS which will be wired to the inputs of the relay will be used as auto-reclose Enable/Disable.

A SEL 2440 will be used as circuit breaker I/O module which will be installed in the control cabinet of the circuit switcher. The I/O module will communicate with RTAC SEL 3530. The SEL 2440 will be connected to RTAC through dual Ethernet fiber ports, multimode 62.5 µm fiber optic

cables and Ethernet managed switches. Even though SEL 2440 will be able to close and open the breaker, this function will be used in the future when IEC 61850 is implemented.

The following inputs will need to be wired to the SEL 2440 as Remote I/O Module for CB-9000:

- CB-9000- 52a;
- CB-9000-52b;
- CB-9000 43R/L-R;
- CB-9000 63P-1(SF6 Low Pressure Alarm;
- CB-9000 63T (SF6 Low Pressure Lock out);
- CB-9000 Trip Coil 1 Failure;
- CB-9000 Trip Coil 2 Failure;
- CB-9000 Loss of Spring Charge Motor Voltage;
- CB-9000 Spring Charge Failure;
- CB-9000 Close Spring Charge Failure;
- CB-9000 Loss of AC Supply;
- CB-9000 Loss of Heater Voltage;
- CB-9000 Loss of DC supply power (The last input of the relay);
- Output for CB-9000 Close; and
- Output for CB-9000 Open.

The following inputs will need to be wired to the SEL 2440 as Remote I/O Module for CB-9001:

- CB-9001- 52a;
- CB-9001-52b;
- CB-9001 43R/L-R;
- CB-9001 63P-1(SF6 Low Pressure Alarm;
- CB-9001 63T (SF6 Low Pressure Lock out);
- CB-9001 Trip Coil 1 Failure;
- CB-9001 Trip Coil 2 Failure;
- CB-9001 Loss of Spring Charge Motor Voltage;
- CB-9001 Spring Charge Failure;
- CB-9001 Close Spring Charge Failure;
- CB-9001 Loss of AC Supply;
- CB-9001 Loss of Heater Voltage;
- CB-9001 Loss of DC supply power (The last input of the relay);
- Output for CB-9001 Close; and
- Output for CB-9001 Open.

The following inputs will need to be wired to the SEL 2440 as Remote I/O Module for 89-3002:

- 89-3002- 89a;
- 89-3002-89b;
- 89-3002 43R/L-R;
- 57-3003-57a;
- 57-3003-57b;
- Motor thermal overload;
- Loss of AC power supply;
- Loss of heater voltage;
- 89-3002 Loss of DC supply power (The last input of the relay);
- Output for 89-3002 Close; and
- Output for 89-3002 Open.

The following inputs will need to be wired to the SEL 411L relay:

- CB-9000 Trip Circuit 2 Supervision (Reserved);
- CB-9001 Trip Circuit 2 Supervision (Reserved);
- 43-52CS for Open CB-9000;
- 43-52CS for Close CB-9000;
- 43-52CS for Open CB-9001;
- 43-52CS for Close CB-9001;
- 43-89CS for Open MOD 3002;
- 43-89CS for Close MOD 3002;
- 43-79CS Auto Reclose On/Off;
- 43R/L-L CB 9000;
- 43R/L-L CB 9001;
- 43R/L-L MOD 3002;
- MOD 3002 -89a;
- MOD 3002 -89b;
- GS 3003-57b**;**
- BFI from SEL487B "B" Bus Bar 1 Protection for BF of CB-9000;
- BFI from Group "A" Bus Bar 1 Protection for BF of CB-9000 (Provision only);
- BFI from SEL421 "B" Protection of Y109 for BF of CB-9001;
- CB-9000-52a;
- CB-9000-52b;
- CB-9001-52a;

- CB-9001-52b;
- DTT from Bedeque Received through RS 232;
- POTT from Bedeque Received through RS 232; and
- 27 VDC Loss of Voltage (the last input of the relay)

The following high interrupting outputs will need to be wired to the SEL 411L relay:

- Trip CB-9000 Trip Coil 2 and BF Trip of CB-9001;
- Trip CB-9001 Trip Coil 2 and BF Trip of CB-9000;
- Close CB-9000;
- Close CB-9001;
- Trip CB CB-9003 Trip Coil 2 (BF Trip of CB-9000);
- Reserved;
- Reserved;
- Trip CB CB-9006 Trip Coil 2 (BF Trip of CB-9000); and
- Trip CB CB-9002 Trip Coil 2 (BF Trip of CB-9001).

The following normal outputs will need to be wired to the SEL 411L relay:

- Relay Failure;
- Block Close CB-9000;
- Block Close CB-9001;
- Block Close CB-9003;
- Block Close CB CB-9006;
- Block Close CB CB-9002;
- Close MOD 3002;
- Open MOD 3002;
- DTT to Bedeque Through RS 232; and
- POTT to Bedeque Through RS 232.

Metering (SEL 411L):

- Three (3) Phase Currents;
- Three (3) Phase Voltages;
- Line 107 (MW); and
- Line 107 (MVAR).

4.1.2.15 138 kV Line 107 "A" Protection, CB-9000 and CB-9001 Prot. &Control (Provision only)

The control building shall be provided with the provision of adding a "A" protection cabinet for autotransformer X3 in a proper place in the future.

4.1.2.16 138 kV Line 109 "B" Protection, CB-9002 and CB-9001 Prot. &Control

SEL421 is to be used as "B" Protection for Line 109 including 21P, 21G, 67G, DTT, POTT and SOTF.

In case of any fault detection, the 50BF elements and the BF Logic for CB-9002 will be initiated internally by any protection element operated and externally by Bus 2 "B" Protection. The breaker failure operation of CB-9002 will energize corresponding latch bit in the relay for this breaker which in turn will trip and latches trips on all local adjacent breakers as well as block closing of these breakers.

"B" Protection will also send Direct Transfer Trip (DTT) to the other end for tripping any remote breaker. The DTT will be sent through Mirrored Bits. Likewise, any DTT received from the other end will trip the CB-9002 and CB-9001.

The LLDB, LBDL and 25 elements for synch check of CB-9002 and CB-9001 will check the voltages across theses breakers and provide close permission for any local closing by the corresponding control switch or for any remote closing through SCADA or HMI.

Also, Line Y109 will have auto recloser (79) which will be initiated by line protection operation and will use LLDB, LBDL and 25 elements to check the voltages before auto reclosing. A 43-79CS which will be wired to the inputs of the relay will be used as auto-reclose Enable/Disable.

A SEL 2440 will be used as circuit breaker I/O module which will be installed in the control cabinet of the circuit switcher. The I/O module will communicate with RTAC SEL 3530. The SEL 2440 will be connected to RTAC through dual Ethernet fiber ports, multimode 62.5 µm fiber optic cables and Ethernet managed switches. Even though SEL 2440 will be able to close and open the breaker, this function will be used in the future when IEC 61850 is implemented.

The following inputs will need to be wired to the SEL 2440 as Remote I/O Module for CB-9001:

Refer to section 4.1.2.1.4 for I/Os of CB-9001.

The following inputs will need to be wired to the SEL 2440 as Remote I/O Module for CB-9002:

- CB-9002- 52a;
- CB-9002-52b;
- CB-9002 43R/L-R;
- CB-9002 63P-1(SF6 Low Pressure Alarm;
- CB-9002 63T (SF6 Low Pressure Lock out);
- CB-9002 Trip Coil 1 Failure;
- CB-9002 Trip Coil 2 Failure;
- CB-9002 Loss of Spring Charge Motor Voltage;
- CB-9002 Spring Charge Failure;
- CB-9002 Close Spring Charge Failure;
- CB-9002 Loss of AC Supply;
- CB-9002 Loss of Heater Voltage;
- CB-9002 Loss of DC supply power (The last input of the relay);
- Output for CB-9002 Close; and
- Output for CB-9002 Open.

The following inputs will need to be wired to the SEL 2440 as Remote I/O Module for 89-3006:

- 89-3006- 89a;
- 89-3006-89b;
- 89-3006 43R/L-R;
- 57-3007-57a;
- 57-3007-57b;
- Motor thermal overload;
- Loss of AC power supply;
- Loss of heater voltage;
- 89-3006 Loss of DC supply power (The last input of the relay);
- Output for 89-3006 Close; and
- Output for 89-3006 Open.

The following inputs will need to be wired to the SEL 421 relay:

- CB-9002 Trip Circuit 2 Supervision (Reserved);
- 43-52CS for Open CB-9002;
- 43-52CS for Close CB-9002;
- 43-89CS for Open MOD 3006;
- 43-89CS for Close MOD 3006;
- 43-79CS Auto Reclose On/Off;
- 43R/L-L CB 9002;
- 43R/L MOD 3006;
- MOD 3006 -89a;
- MOD 3006 -89b;
- GS 3007-57b**;**
- BFI from SEL487B "B" Bus Bar 2 Protection for BF of CB-9002;
- BFI from Group "A" Bus Bar 2 Protection for BF of CB-9002 (Provision only);
- CB-9002-52a;
- CB-9002-52b;
- CB-9001-52a;
- CB-9001-52b;
- DTT from ALT Received;
- POTT from ALT Received; and
- 27 VDC Loss of Voltage (the last input of the relay).

The following high interrupting outputs will need to be wired to the SEL 421 relay:

- Trip CB-9002 Trip Coil 2;
- Trip CB-9001 & BF Trip (BF Trip of CB-9002) to Trip Coil 2;
- Close CB-9002;
- Close CB-9001;
- Trip CB-9005 Trip Coil 2 (BF Trip of CB-9002);
- Trip CB-9008 Trip Coil 2 (BF Trip of CB-9002);
- Reserved; and
- Reserved.

The following normal outputs will need to be wired to the SEL 421 relay:

- Relay Failure;
- Block Close CB-9002;
- Block Close CB-9001;
- Block Close CB-9005;
- Block Close CB-9008;
- Close MOD 3006;
- Open MOD 3006;
- DTT to ALT; and
- POTT to ALT.

Metering (SEL 421):

- Three (3) Phase Currents;
- Three (3) Phase Voltages;
- Line 109 (MW); and
- Line 109 (MVAR).

4.1.2.17 138 kV Line 109 "A" Protection, CB-9001 and CB-9002 Prot. &Control (Provision only)

The control building shall be provided with the provision of adding a "A" protection cabinet for autotransformer X3 in a proper place in the future.

4.1.2.18 138 kV Bus Bar 1 "B" Protection

SEL 487B is to be used as "B" Protection for Bus Bar 1 including 87B elements.

In case of any fault detection, the 87B elements trip CB 9000, CB 9003 and CB 9006 and will energize 86B1/B Bus bar lock out relay which will trip and latches trips on the above-mentioned breakers as well as block closing of these breakers.

The sudden pressure relay of SSVT-B1 will be monitored by a SEL2440 monitoring IED and through Mirrored Bits communications, 62.5µm F/O cable, SEL2812M media converters send the trip signal to the bus bar protection to clear the bus bar fault.

SEL 487B will initiate breaker failure of these breakers. Therefore, it will send BFI to the IEDs which include the respective breaker failure relays. These are: SEL 487E of the auto transformer, SEL 411L the line differential of Cable C4 and SEL 421, the line protection of Line Y107.

The following inputs will need to be wired to the SEL 487B relay:

- BB1-86B1/B Status;
- BB1-86B1/B Coil Monitoring;
- SSVT-BB1 63T; and
- 27 VDC Loss of Voltage (the last input of the relay).

The following high interrupting outputs will need to be wired to the SEL 487B relay:

- Trip CB-9000 Trip Coil 2;
- Trip CB-9003 Trip Coil 2;
- Reserved;
- Reserved; and
- Trip CB-9006 Trip Coil 2.

The following normal outputs will need to be wired to the SEL 487B relay

- Trip BB1-86B1/B; and
- Relay failure.

Metering (SEL 487B):

- Three (3) Phase Currents; and
- Three (3) Phase Voltages.

The following high interrupting outputs will need to be wired to the BB1-86B1/B Lock out relay:

- Trip BB1-86B1/B;
- Trip CB-9000 Trip Coil 2;
- Trip CB-9003 Trip Coil 2;
- Reserved;
- Reserved;
- Trip CB-9006 Trip Coil 2;
- Block Closing CB-9000;
- Block Closing CB-9003; and
- Block Closing CB-9006.

4.1.2.19 138 kV Bus Bar 1 "A" Protection (Provision only)

The control building shall be provided with the provision of adding a "A" protection cabinet for Bus Bar 1 in a proper place in the future.

4.1.2.20 138 kV Bus Bar 2 "B" Protection

SEL 487B is to be used as "B" Protection for Bus Bar 2 including 87B elements.

In case of any fault detection, the 87B elements trip CB 9002, CB 9005 and CB 9008 and will energize A86B Bus bar lock out relay which will trip and latches trips on the above-mentioned breakers as well as block closing of these breakers.

The sudden pressure relay of SSVT-B2 will be monitored by a SEL2440 monitoring IED and through Mirrored Bits communications, 62.5µm f/o cable, SEL2812M media converters send the trip signal to the bus bar protection to clear the bus bar fault.

SEL 487B will initiate breaker failure of these breakers. Therefore, it will send BFI to the IEDs which include the respective breaker failure relays. These are: SEL 411L of the Cable C3, SEL 421 of the Y113 and SEL 421, the line protection of Line Y109.

The following inputs will need to be wired to the SEL 487B relay:

- BB2-86B2/B Status;
- BB2-86B2/B Coil Monitoring;
- SSVT-BB2 63T; and
- 27 VDC Loss of Voltage (the last input of the relay).

The following high interrupting outputs will need to be wired to the SEL 487B relay:

- Trip CB-9002 Trip Coil 2;
- Trip CB-9005 Trip Coil 2;
- Trip CB-9008 Trip Coil 2;
- Reserved; and
- Reserved.

The following normal outputs will need to be wired to the SEL 487B relay

- Trip BB2-86B2/B; and
- Relay failure.

Metering (SEL 487B):

- Three (3) Phase Currents; and
- Three (3) Phase Voltages.

The following high interrupting outputs will need to be wired to the BB2-86B2/B Lock out relay:

- Trip BB2-86B2/B;
- Trip CB-9002 Trip Coil 2;
- Trip CB-9005 Trip Coil 2;
- Trip CB-9008 Trip Coil 2;
- Reserved;
- Reserved;

- Block Closing CB-9002;
- Block Closing CB-9005; and
- Block Closing CB-9008.

4.1.2.21 138 kV Bus Bar 2 "A" Protection (Provision only)

The control building shall be provided with the provision of adding a "A" protection cabinet for Bus Bar 2 in a proper place in the future.

5.0 TELECOMMUNICATION SYSTEMS

This section describes the Telecommunications / Teleprotection systems and interfaces at the new Borden substation and communication interfaces with other MECL's telecommunication facilities.

5.1 OVERVIEW

The following provides the design and preferred equipment criteria of the telecommunication /teleprotection equipment at the new Borden substation. The backbone of the communications system will be a new 7Ghz microwave radio with 45 Mbps bandwidth, capable of a minimum of 16 T1 channels and 3 Ethernet / IP channels. These new radios will also be implemented at Bedeque, Borden, Green Road and ECC expanding their bandwidth and traffic capability for the new protection and control systems as well as to facilitate future communications growth.

Data from the microwave radios are feed either directly to the teleprotection IMUX 2000 equipment, or to router switches through an industrial hardened firewall into redundant LANs for control and monitoring of the Substation Automation System (SAS).

Dual redundant LANs ('A' and 'B') will be deployed using a 'ROOT' managed switch and redundant managed network switch configuration per LAN. Connected to each side of these LANs, three industrial computers will monitor and control the Borden substation. These computers include;

- SEL-3530 RTAC SCADA Computer
- SEL-3355 Data Concentrator running TEAM software
- SEL-3355 Data Concentrator running SUBNET software

A GPS clock, SEL-2407, will be connected to the SEL-3530 RTAC to provide both NTP and IRIG-B time synchronization signals to all protection and control devices. HMI systems will be connected to each of the Data Concentrators computers for display and control functionality.

RFL IMUX 2000 Teleprotection multiplexers will be used to interface the protection devices for the Submarine Cable # 3 and #4, and the protection schemes for Y107, Y113, including both the existing 69 kV and new 138 kV operational modes. The existing scheme for the Y113 69 kV control system will remain in place in the existing control building, and will interface with the new RFL IMUX 2000. Switching teleprotection signals for these 69 kV and 138 kV control schemes will be accomplished at the RS-232 level for the mirrored-bits signals.

The existing substation control equipment will remain functional for the gas turbine and other auxiliary equipment Including the existing 69 kV Y113 protection systems. A multi-mode 24 count fibre cable will connect the existing and the new Borden control buildings for any data exchange.

The telecommunications and teleprotection systems will be designed with the provision to comply in the future with NPCC, NERC and FERC requirements, as noted in Section 2.2. The telecommunication and teleprotection systems will comply to NERC-CIP, including the following;

- NERC CIP-005 Cyber Security - Electronic Security Perimeter(s); and
- NECR CIP-006 Cyber Security – Physical Security of Critical Cyber Assets.

A Network Architecture Block Diagram details the hierarchical layout of the Telecommunication and Network systems and subsystems. See drawing 133546898 E-7002 for details.

5.3 DESIGN CRITERIA

5.3.1 Communications Design

A seven (7) GHz digital microwave radio system is the primary communication media for MECL carrying mission critical and WAN data to designated locations within MECL's electrical network. With additional traffic required for this project and projected traffic in the future, new Aviat Microwave 7 GHz, radios with 45 Mbps bandwidth, capable of a minimum of 16 T1 channels and three (3) Ethernet channels, will be installed at Bedeque, Borden, Green Road and ECC.

The new radios will have T1 and Ethernet connectivity to allow both direct WAN and VLAN data transmission over the system to the various substations and Energy Control Center.

The new radios will be Aviat Eclipse ODU 600, with a separate RF unit mounted at the antenna on the tower, and the signal processing units (SPU) mounted in the Panels 113 and 213.

With existing antennas being reused, new IF (Intermediate Frequency) feedlines will be installed at Borden, between the new Signal Processing Unit (SPU) in Panels 113 and 213 and the new RF units at the antenna locations.

T1 signals from each of the radios will be wired from the SPU equipment shelf to 56 - channel T1 patch panels with cross-connect and monitoring capability.

5.3.2 Network Design

There are two (2) distinct data networks for the new Borden Substation. WAN (Wide Area Network) for data traffic directed throughout MECL's communications systems and dual redundant LANs (Local Area Network) for local traffic pertaining to the substation's protection and control. These two systems will be separated by an industrial hardened firewall.

The WAN network interfaces the radio systems through the appropriate T1 patch /jack-field panels to router/switches for each radio route.

The dual redundant, 61850 compliant LAN networks will interface with the station's protection and control systems. Each of the LANs 'A' and 'B' will use a 'ROOT' and redundant (MAIN and BACKUP) managed network switch configuration. Dual ported protection IEDs for the submarine Cables #3 and #4, the Control Building and the switchyard, including IEDs for Y107 and Y113 will connect their associated LANs.

Connected to each side of these LANs will be three industrial computers for monitor and control the Borden substation.

Redundant managed switches; RuggedCOM RSG-2100 for LAN 'A' and SEL-2730M for LAN 'B' will be used to guarantee the control and monitoring of the IEDs to the station SCADA system. This configuration is designed to compile with IEC-61850 network standards for future implementation. The interface to other MECL's facilities including ECC will be through routers and a firewall to the designated radio systems.

The managed switches will be configured to communicate to the WAN network via redundant Router/Switches through a CISCO Firewall. This firewall will separate the local LAN traffic from the WAN traffic. One of the main requirements of the CISCO firewall is a "fail open" function. This term, used by CISCO, means that if the unit fails to provide firewall protection to the networks, data traffic will continue to flow and maintain protection and control of the substation and the associated transmission lines. Loss of the firewall's functionality will be alarmed to ECC for action.

All switches, routers and firewalls are to be IEEE 1613 Class 2 compliant.

The network switches will have automatic transfer capability to provide protection against a single switch failure. Loss of either LAN will be alarmed. No single equipment or component failure will interrupt communications between any of the LANs and the connected control systems.

The SCADA system in the existing substation control building will connect to the new control system, at each the ROOT switches 'A' and 'B', through the multi-mode fibre cable between the two (2) buildings.

A GPS clock will be part of the network architecture providing a time synchronizing NTP signal to all teleprotection and selected protection relays. The GPS clock will directly interface with the SEL-3530 RTAC SCADA computer.

5.3.3 Protocols

Many SAS (Substation Automation System) protocols will be implemented in this design, including but limited to, the following;

- DNP 3, level 2 protocol over Ethernet is implemented to communicate between the ECC, RTAC-SCADA and Data Concentrator computers and the substation IEDs. This is based on the present Survalent SCADA host at ECC in Charlottetown and to a lesser degree with the present Survalent Scout RTU in the existing substation control room.
- Rapid Spanning Tree Protocol (RSTP) will be implemented in the future using IEC-61850 for the managed switches to speed network recovery and convergence after a topology change caused by a link or device failure. Modern managed Ethernet switches with rapid spanning tree protocol (RSTP) manage the flow of mission-critical messages in redundant paths of a network and, at the same time, identify any communication failure in ring network topology with a reconfiguration time of only a few milliseconds.
- SEL's "mirrored bits" protocol, providing high-speed, secure, point-to-point communication of real or virtual contact-status bits over RS-232, is used for distance line protection from SEL 311C or SEL 421 IEDs.
- C37.94 optical interfaces are used to provide reliable and secure line differential channels between line current differential IEDs and the IMUX 2000 teleprotection equipment.
- OSPF (Open Shortest Path First) routing protocol will be used in the switches and routers to route traffic to their respective locations and provides network detection of changes or failures in the topology and converges on a new loop-free routing structure within seconds.
- NTP and IRIG-B will be used in the GPS clock to convey time synchronizing messages to all network equipment and control equipment for accurate data time stamping.

- ICCP traffic will continue to be used to transfer between MECL's ECC and NB POWER's ECC over the radio and network systems.
- SEL fast messaging.

The system is designed to facilitate IEC-61850 protocols for future expansions.

5.3.4 Teleprotection

The teleprotection equipment for Protection 'A' and 'B' for Cable C3 and Cable C4 will be RFL IMUX 2000 multiplexer units. These units are used on both the MECL and NB Power systems for sending the 'A' and 'B' protection signals between Borden and Memramcook by separate radio systems and paths.

Teleprotection and protection for Y107 and Y113 will be moved from the existing control building to the new control room, and interface with new IMUX 2000 multiplexer system using RS-232, mirrored bits for distance relaying and a C37.94 fibre interface for the line differential protection. This multiplexer will also facilitate inputs from the existing 69 kV Y113 protection through an RS-232/fibre interface from the existing control building.

The RFL IMUX 2000 multiplexer units will handle all keyed inputs and outputs such as DTT and POTT.

The RFL IMUX 2000 multiplexer units have the capability of "drop and insert" communications between multiplexers. This feature will allow transfer of special protection signals between NB Power and MECL's other substations including Bedeque and Sherbrooke, without hardwiring teleprotection I/O signals between multiplexers.

Each IMUX 2000 multiplexer will interface directly to the T1 patch panels for connection to the respective microwave radios to reduce any latency in the communications for the transfer trip signals.

A list of all Input/Output signals for the Cable C3 and C4 are listed in section 4.1.2.7.

Note: Final I/O list will be determined between MECL and NB Power

5.3.5 Metering

Revenue metering between MECL and NB Power for submarine Cables C3 and C4 will be collected at the Cape Tormentine riser station. Dedicated fibres on these cables will be used to transfer separate metering data for MECL and NB Power back to their respective metering servers.

At Cape Tormentine, there will be two ION type revenue meters, a main and a backup, for each cable, for a total of four meters. Each ION meter has an Ethernet port and an RS-232 port. MECL will use the Ethernet ports and NB Power will use the RS-232 ports. Both MECL's and NB Power's metering will use the designated communication fibres in the submarine cables.

MECL's metering data will be converted from Ethernet through a switch and media converter for transmission over the cable fibre. NB Power's metering data will be converted from RS-232 to fibre by a terminal server and media converter for transmission over the cable fibre.

Fibres dedicated for communications in submarine Cable C3 and C4 will be terminated in the wall mounted Panel 301 of the new control building. MECL's metering data will be transferred to the existing control building via multi-mode fibre to MECL's Ethernet connection to the West Royalty metering server. NB Power's metering data will be transferred to a media converter and connected to the Aviat microwave to Green Road over Ethernet.

Metering data will be sent to the RTAC SCADA system for display at ECC.

Connections and configuration for the metering will be done by others.

5.3.6 Interface Design

T1 wiring between the Aviat microwave radios and the 'A' and 'B' router/switches will connect through a high density jack field panel providing cross-connect and patching capability.

All IEDs for the Cable Protection and Control Substation Protection will be connected to the RTAC SEL-3530 SCADA computer by Ethernet copper connections through the managed network switches. The substation yard protection IEDs will be connected to the managed switches via fibre optic cable.

IEDs for the submarine cables C3 and C4 Protection will interface to the teleprotection equipment by hardwire copper and C37.94 fibre connections. These IEDS will communicate to the managed switches over Ethernet CAT5e cables. Connections for 'A' and 'B' systems within the teleprotection panels will be properly segregated.

All Ethernet connections within the panels will be Ethernet copper cables. A colour code scheme will be used to distinguish between the two LANs – orange for LAN 'A' and blue for LAN 'B'.

The IMUX 2000 multiplexer interfaces will facilitate the various types of teleprotection inputs and outputs required for the station and cable protection schemes. These include RS-232 for mirrored bits, C37.94, and transfer trip keying.

Teleprotection signals for Y113 for the 69 kV control will interface through the existing control building over the new multi-mode fibre to the new control building into Panel 214 for connection into the new IMUX 2000 for Y107 and Y113 Teleprotection. Y113 will have the capability of operating at either 69 kV or 138 kV. The RFL IMUX 2000 in Panel 214 provides teleprotection for Y113 from both the 69 kV protection relays and the new 138 kV protection relays. When switching between 69 kV and 138 kV, the teleprotection signals are switched using an RS-232 switch arrangement for the mirrored-bits signals. Position Indication of this switch will be sent to the SCADA for indication at ECC.

Teleprotection signals for Y107 and Y113 for the 138 kV protection will interface into Panel 214 for connection into the new IMUX 2000.

There will be a communication interface between the IMUX 2000 in panel 116 and the IMUX 2000 in panel 214 to support any Cable Overload Protection or Special Protection System interfaces between NB Power and MECL. These signals will be configured to drop and inserted in the IMUX 2000 for connection to Bedeque and Sherbrooke.

5.4 PREFERRED EQUIPMENT CRITERIA

5.4.1 General Layout

The layout of the telecommunication and teleprotection panels will separate the LANs and the network switches. Separate cabinets will be used to house the following equipment.

The layout of the cabinets will be as follows:

1. Panel 112: SCADA and LAN 'A'
2. Panel 212: SCADA and LAN 'B'
3. Panel 113: M/W Radio to Bedeque for Prot 'A'
4. Panel 213: M/W Radio to Green Road for Prot 'B'
5. Panel 114: Provisional
6. Panel 214: Y107 and Y113 Teleprotection (Prot 'B')
7. Panel 115: Provisional
8. Panel 215: Y109 Teleprotection (Future)
9. Panel 116: Cable C3 and C4 "Main" Multiplexer
10. Panel 216: Cable C3 and C4 "ALTERNATE" Multiplexer
11. Panel 301: Submarine cable fibre termination

The philosophy for this design facilitates two independent protection systems (A and B) and two independent teleprotection systems.

5.4.2 Preferred Equipment

5.4.2.1 Aviat Microwave Radios

Aviat Eclipse Packet Node Microwave radios, Model ODU-600 7 GHz radios, with 45 Mbps bandwidth, will be installed at Borden to interface to Bedeque and Green Road.

Each radio/signal processing unit has the following capabilities:

- 16 XE1/DS1 V2 Protectable channels
- GE3 (3 port) Gigabit Ethernet Switch card
- Adaptive modulation capability
- Software license for 150 Mbps total radio payload capacity

Since this is the ODU or Out Door Unit, the SPU or Signal Processing Units will be housed in Panels 113 and 213. The RF or microwave transmitting unit will be installed up the tower at the antenna location. IF or Intermediate Frequency cable, LMR-400 supplied by Aviat, will connect the RF unit with the SPU unit.

The existing antennas will be reused and reconnected to the new RF units.

Each of the radio communication T1 channel outputs will be wired to a Telect jack field, model 010-0156-0601 capable of 56 T1 circuits for cross-connecting and T1 patching.

All radio equipment including T1 patch/jack-field panels will be supplied by Aviat, and upon Fat testing will be supplied to the PCT building supplier for installation. Configuration of these radios will be implemented by Aviat, in the presence of MECL personnel. Maintenance will be done by MECL.

5.4.2.2 Routers/Switches

The two router switches, 'A' and 'B' will be CISCO 4431. Traffic from the firewall will be routed to the respective T1 patch panel connection and patched to the appropriate T1 channel allocation on the microwave radio.

All of the router/switches will be configured by the PCT building supplier with CISCO certified professionals, in the presence of MECL personnel. Maintenance will be done by MECL.

5.4.2.3 Firewall

As part of the security and segregation of the data flows, a single firewall will be installed between SCADA and managed switches and the routers/switches.

The firewall unit must be able to continue data flow if the firewall fails to provide intrusion protection. One of the main requirements of the CISCO firewall is a "fail open" function, especially developed for SCADA applications. This term, used by CISCO, means that if the unit fails to provide firewall protection to the networks, data traffic will continue to flow and maintain protection, control and monitoring of the substation and the associated transmission lines. Loss of the firewall's functionality will be alarmed to ECC for action

The firewall will be CISCO ISA3000 or approved equivalent. Configuration of the firewall will be done by the PCT building supplier, with CISCO certified professionals, in the presence of MECL personnel. Maintenance will be done by MECL.

5.4.2.4 Network Managed Switches

The managed switches for the dual independent LANs will be RuggedCom RSG-2100 for LAN 'A' and SEL-2730M for LAN 'B'. These switches will be installed in Panels 112 for LAN 'A' and Panel 212 for LAN 'B'.

Protection IEDs for the cable protection are dual ported to redundant managed switches per LAN. These managed switched are connected to a single 'ROOT' managed switch interfacing the SCADA and Data Concentrator computers.

Each of the managed switches, MAIN and BACKUP are connected to the IEDs to provide redundancy for each of the LANs and to prevent a single point of failure.

RSTP protocol will be implemented for IEC-61850.

All network cabling within the panels will be Ethernet CAT5e shielded and stranded. Orange coloured CAT5e cable will be designated for LAN 'A' systems and blue coloured CAT5e will be designated for LAB 'B' systems.

All of the managed switches will be configured the PCT building supplier, in the presence of MECL personnel. Maintenance will be done by MECL.

5.4.2.5 Teleprotection

The teleprotection for Cable Protection 'A' and Protection 'B' will be RFL IMUX 2000. Each RFL unit will contain dual power supplies, T1 channel interfaces and the appropriate interface cards for each of the protection 'A' and 'B' schemes.

For each Protection 'A' and 'B' schemes, there will be two RFL IMUX 2000 chassis shelves, one for the Cable Protection 'A' IEDs and the other for Cable Protection 'B' IEDs. Each of the IMUX chassis will have their own T1 connection to the respective T1 Patch connection. Interface cards for C37.94 and for bi-direction signals such as DTT and POTT will be installed in each of the chassis to accommodate the requirements defined in Section 4.1.2.7.

Teleprotection for Y107 and Y113 will use new IMUX 2000 multiplexer system using RS-232 mirrored bits for distance relaying and a C37.94 fibre interface for the line differential protection. This multiplexer will also facilitate inputs from the existing 69 kV Y113 protection through an RS-232/fibre interface from the existing control building.

The IMUX 2000 in panel 116 and the IMUX 2000 in panel 214 will have a communication interface to support any Cable Overload Protection or Special Protection System interfaces between NB Power and MECL. These signals will be configured to drop and inserted in the IMUX 2000 for connection to Bedeque and Sherbrooke.

The RFL IMUX 2000 in Panel 214, that provides teleprotection for Y113 for both the 69 kV and 138 kV operating modes, will use an RS-232 switch to switch the mirrored bits teleprotection signal inputs between the two modes. Position Indication of this switch will be sent to the SCADA for indication at ECC.

Wiring from each of these RFL IMUX chassis will be wired down to Marathon 1600 ST type terminal blocks, mounted on the side of the panel to interface to the protection panels. These Marathon terminal blocks will be arranged in columns to segregate the 'A' and 'B' systems, where applicable.

The teleprotection equipment will be configured by the PCT building supplier in the presence of MECL personnel. Maintenance will be done by MECL.

5.4.2.6 SCADA Computers

The overall SCADA system will comprise of three computer systems, an SEL-3530 RTAC (Real Time Automation Controller) SCADA computer, an SEL 3355 computer and an SEL 3354. Both the SEL-3355 and 3354 will operate as data concentrators.

The SEL-3530 RTAC will function as Borden's substation SCADA system, providing automation logic, monitoring the substation through the connected IEDs, sending data back to ECC, and providing control functions from ECC to operate substation equipment. The SEL-3530 will be located in Panel 112.

The SEL-3355 industrial computer will serve as a data concentrator running SEL's TEAM software to collect power system data from the IEDs and protection devices for storage and data retrieval. Access of this data will be achieved through the 'ROOT' managed switches and the

firewall. The HMI for the 3355 will be a rack-mounted console KVM switch with a 17 inch LCD screen. The SEL-3355 will be located in Panel 212.

A second SEL-3355 industrial computer will run SUBNET's SubSTATION Server and SubSTATION Explorer applications performing data concentration, protocol translation, event file collection and enterprise connectivity. The HMI for the 3355 will be a rack-mounted console KVM switch with a 17 inch LCD screen. The SEL-3355 will be located in Panel 112.

All three computers will be dual ported and will communicate to both LAN 'A' and LAN 'B' through the higher level 'ROOT' managed switch.

Each of the computers will have dual 125 VDC power supplies.

The GPS clock, SEL 2407 running NTP (Network Time Protocol) and IRG-B will interface via Ethernet to the SCADA RTAC SEL 3530 computer providing synchronized time signals to all teleprotection and selected protection relays.

Configuration of the station computers will be done by the PCT building supplier in the presence of MECL personnel. Maintenance will be done by MECL.

5.4.3 Submarine Cable – Fibre Terminations

Terminations for the fibres within submarine Cable #3 and #4 will terminate in the wall-mounted Panel 301.

Two (2) fibre termination panels, Corning LANScape LANS-02U-B8 or equivalent, will be installed to terminate the fibres from each of the cables.

The fibres designated as "COMMUNICATIONS" will provide metering data to MECL and NB POWER.

Fibres designated as "DTS" will provide temperature and health monitoring of the submarine cables to the DTS Monitoring system.

The General Contractor will provide equipment and perform the installations.

5.4.4 Fibre Cable to Existing Control Room

Equipment in the existing Borden substation control room will remain functional and will interface to the new Borden substation control room and ECC via the managed LANs 'A' and 'B'.

A new armored multi-mode 24 fibre cable will be installed between the existing substation control building and the new substation building. Fibre termination panels will be installed at each end for fibre patching and routing. The fibre optic cable will be enclosed in an orange colored loom protector from the point of entry in the both control buildings to the fibre termination panels.

Fibre manufacturer will be Corning, cable type FREEDM® Loose Tube, Gel-Free, Interlocking

Armored Cable, 24 fibres or approved equivalent. All fibre connections will be blue ST UPC Connections.

This equipment will include:

- Willowglen RTU for the Gas Turbine;
- Existing RTAC SCADA computer;
- Survalent SCOUT RTU;
- ATA phone equipment;
- 69 kV Protection; and
- Metering interfaces to MECL's metering server.

The equipment will communicate to the new control room via a multi-mode fibre cable connecting directly into the managed switches. At the new control room end, the signals will be passed to the router/switches to the appropriate T1 channel on the microwave radios.

5.4.5 Power Requirements

All teleprotection equipment will be powered from the redundant 125 VDC power systems in the new control building. Power for the Aviat microwave radios which will be suplied from dual DC-DC Converters, 125 VDC to 48 VDC, located in each of the microwave cabinet, Panels 113 and 213.

Each cabinet will contain a Westell N250120-N130CY dual fuse panel feed from two (2) independent 125 VDC feeds. Each piece of equipment in the panel will receive dual independent 125 VDC feeds from the fuse panel.

The PCT building supplier will supply and install all power feeds.

5.4.6 Grounding

Isolated ground bars will be installed at the top of the panels and connected by a double bolted lugged #6 AWG green stranded wire to the station ground located in the cable tray above each of the panels. Each piece of equipment within the cabinet will be grounded with a minimum of #12 AWG green stranded wire to the ground bus at the top of the panel.

The PCT building supplier will supply and install all grounds.

APPENDICES

APPENDIX 1

133546898E-8001

(This report includes the latest drawing available at the time of the report issue. Consult the project drawing log for the latest version of the drawing.)

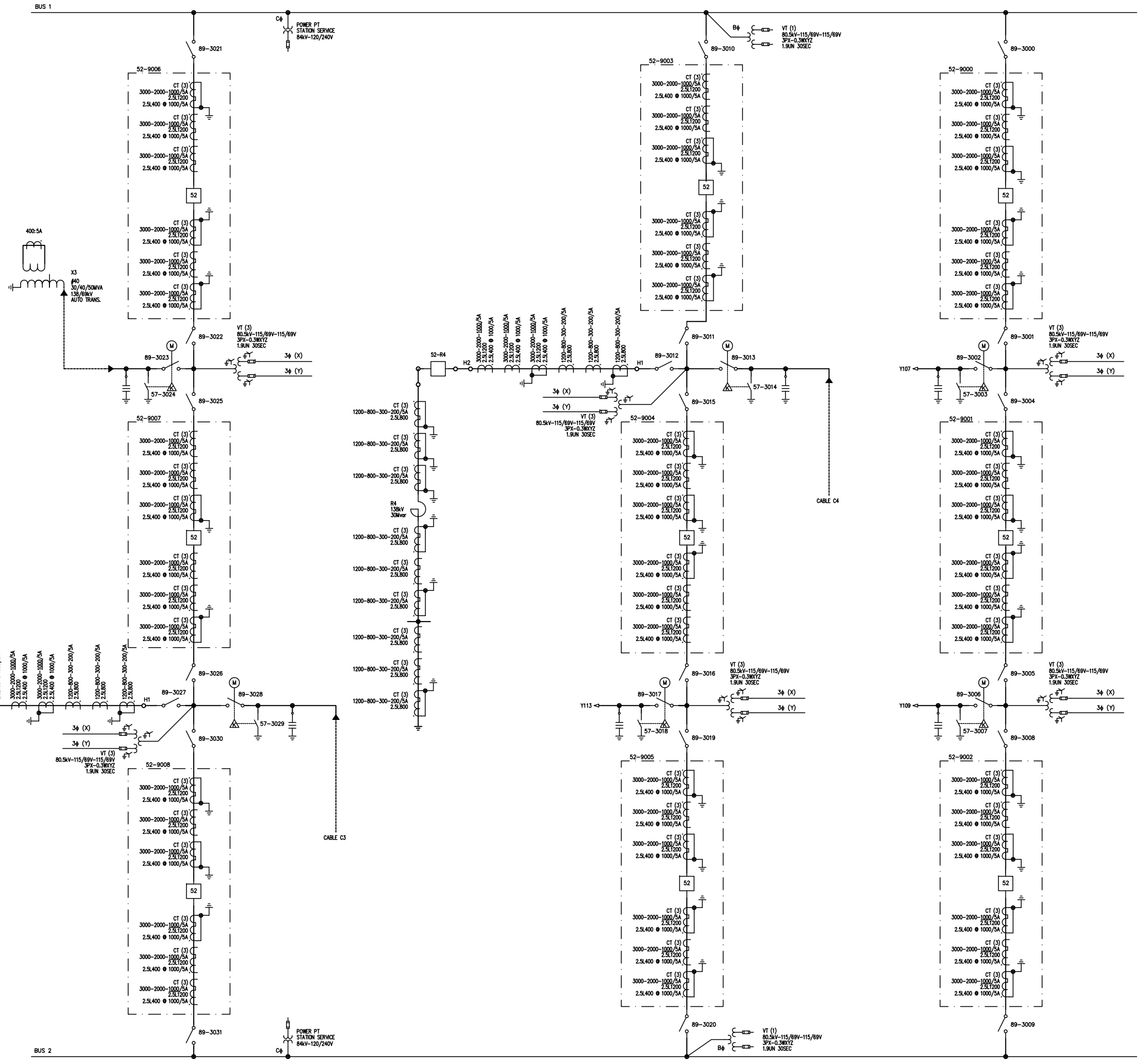

Stantec

Stantec
845 Prospect Street
Fredericton, NB E3B 2T7
Tel. 506-452-7000
www.stantec.com

Copyright Reserved

The Contractor shall verify and be responsible for all dimensions. DO NOT scale the drawing - any errors or omissions shall be reported to Stantec without delay.
The Copyrights to all designs and drawings are the property of Stantec. Reproduction or use for any purpose other than that authorized by Stantec is forbidden.

Client

MARITIME ELECTRIC
A FORTIS COMPANY

Notes

Revision	By	Appd.	YY.MM.DD
D GENERAL REVISION	ZG	HF	16.03.17
C GENERAL REVISION	JM	HF	16.03.01
B GENERAL REVISION	JM	HF/HK	16.02.02

Issued	By	Appd.	YY.MM.DD
D ISSUED FOR PCT TENDER	ZG	HF	16.03.17
C ISSUED FOR PCT TENDER	DGM	HF	16.03.09
B ISSUED FOR REVIEW	JM	HF/HK	16.02.02
A ISSUED FOR REVIEW	JM	HF/HK	15.12.04

File Name: 133546898E8001.DWG	Dwn.	Chkd.	Dsgn.	YY.MM.DD
	JM		HF/HK	15.12.03

Permit-Seal

PRELIMINARY
NOT FOR CONSTRUCTION

Client/Project

MARITIME ELECTRIC COMPANY, LIMITED

BORDEN SUBSTATION AND
CAPE TORMENTINE RISER STATION

Borden, PEI

Title

SINGLE LINE DIAGRAM
BORDEN SUBSTATION

Project No.	Scale	
133546898		
Drawing No.	**Sheet**	**Revision**
E-8001	1 of 1	D

ORIGINAL SHEET - ISO A1

APPENDIX 2

133546898E-8002

(This report includes the latest drawing available at the time of the report issue. Consult the project drawing log for the latest version of the drawing.)

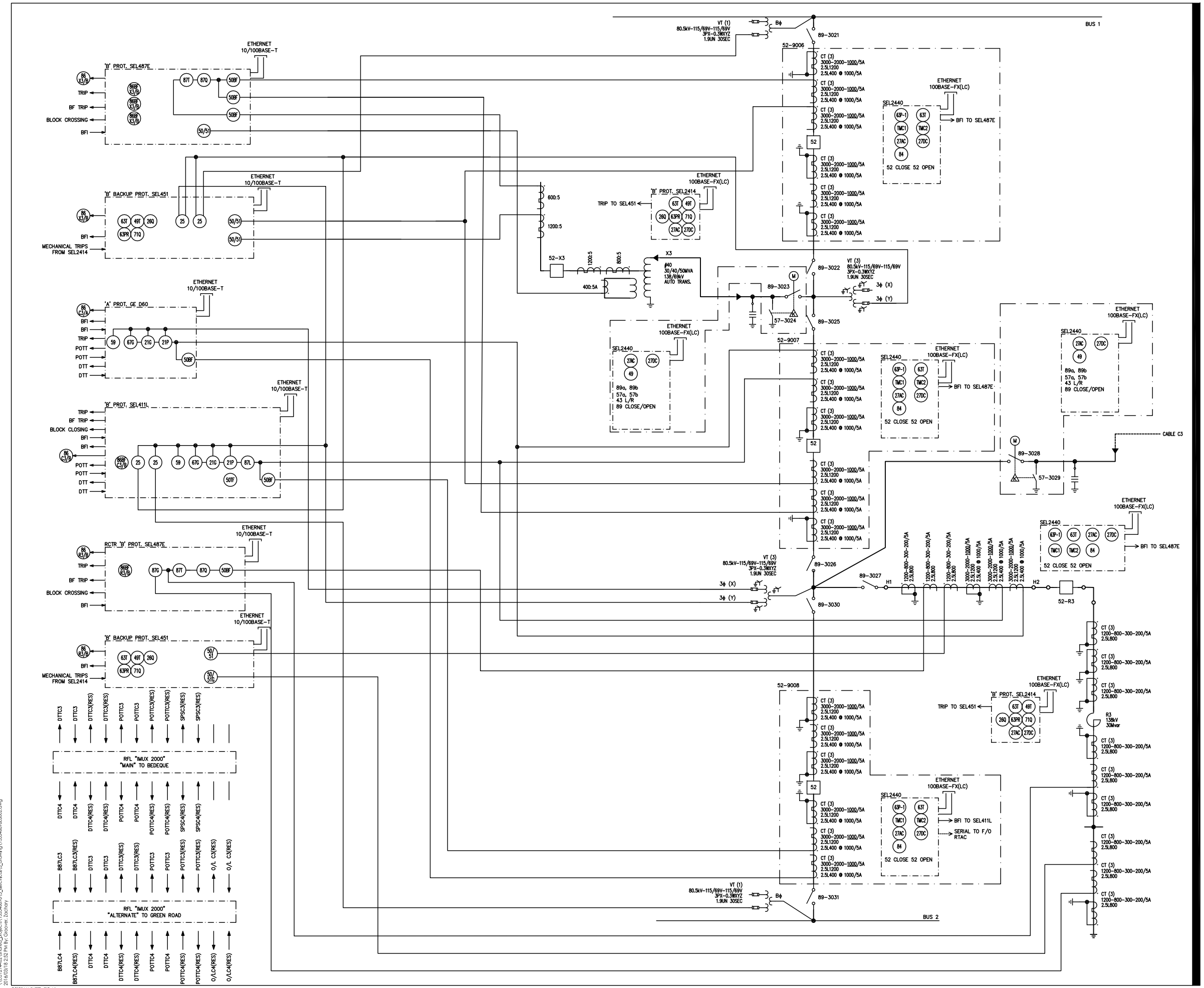

ORIGINAL SHEET - ISO A1

\\ns1213\s402\shared_projects\133546898_electrical_drawings\133546898E8002.dwg
2016/03/17 2:24 PM By: Conover, Zachary

Stantec

Stantec
845 Prospect Street
Fredericton, NB E3B 2T7
Tel. 506-452-7000
www.stantec.com

Copyright Reserved

The Contractor shall verify and be responsible for all dimensions. DO NOT scale the drawing - any errors or omissions shall be reported to Stantec without delay.
The Copyrights to all designs and drawings are the property of Stantec. Reproduction or use for any purpose other than that authorized by Stantec is forbidden.

Client

MARITIME ELECTRIC
A FORTIS COMPANY

Notes

1. THE PROTECTION SYSTEM SHALL BE PROVIDED WITH THE PROVISION OF ADDING 'A' PROTECTION FOR THE REACTOR R3 AND AUTO TRANSFORMER X3 IN THE FUTURE.

		By	Appd.	YY.MM.DD
D	GENERAL REVISION	ZG	HF	16.03.17
C	GENERAL REVISION	JM	HF	16.03.01
B	GENERAL REVISION	JM	HF/HK	16.02.02

Revision

		By	Appd.	YY.MM.DD
D	ISSUED FOR PCT TENDER	ZG	HF	16.03.17
C	ISSUED FOR PCT TENDER	DGM	HF	16.03.09
B	ISSUED FOR REVIEW	JM	HF/HK	16.02.02
A	ISSUED FOR REVIEW	JM	HF/HK	15.12.04

Issued

File Name: 133546898E8002.DWG	Dwn.	Chkd.	Dsgn.	YY.MM.DD
	JM		HF/HK	15.12.03

Permit-Seal

PRELIMINARY
NOT FOR CONSTRUCTION

Client/Project

MARITIME ELECTRIC COMPANY, LIMITED

BORDEN SUBSTATION AND
CAPE TORMENTINE RISER STATION

Borden, PEI

Title

PROTECTION AND CONTROL SLD
BORDEN SUBSTATION
TRANSFORMER X3 & CABLE #3

Project No.	Scale	
133546898		
Drawing No.	**Sheet**	**Revision**
E-8002	1 of 1	D

APPENDIX 3

133546898E-8003

(This report includes the latest drawing available at the time of the report issue. Consult the project drawing log for the latest version of the drawing.)

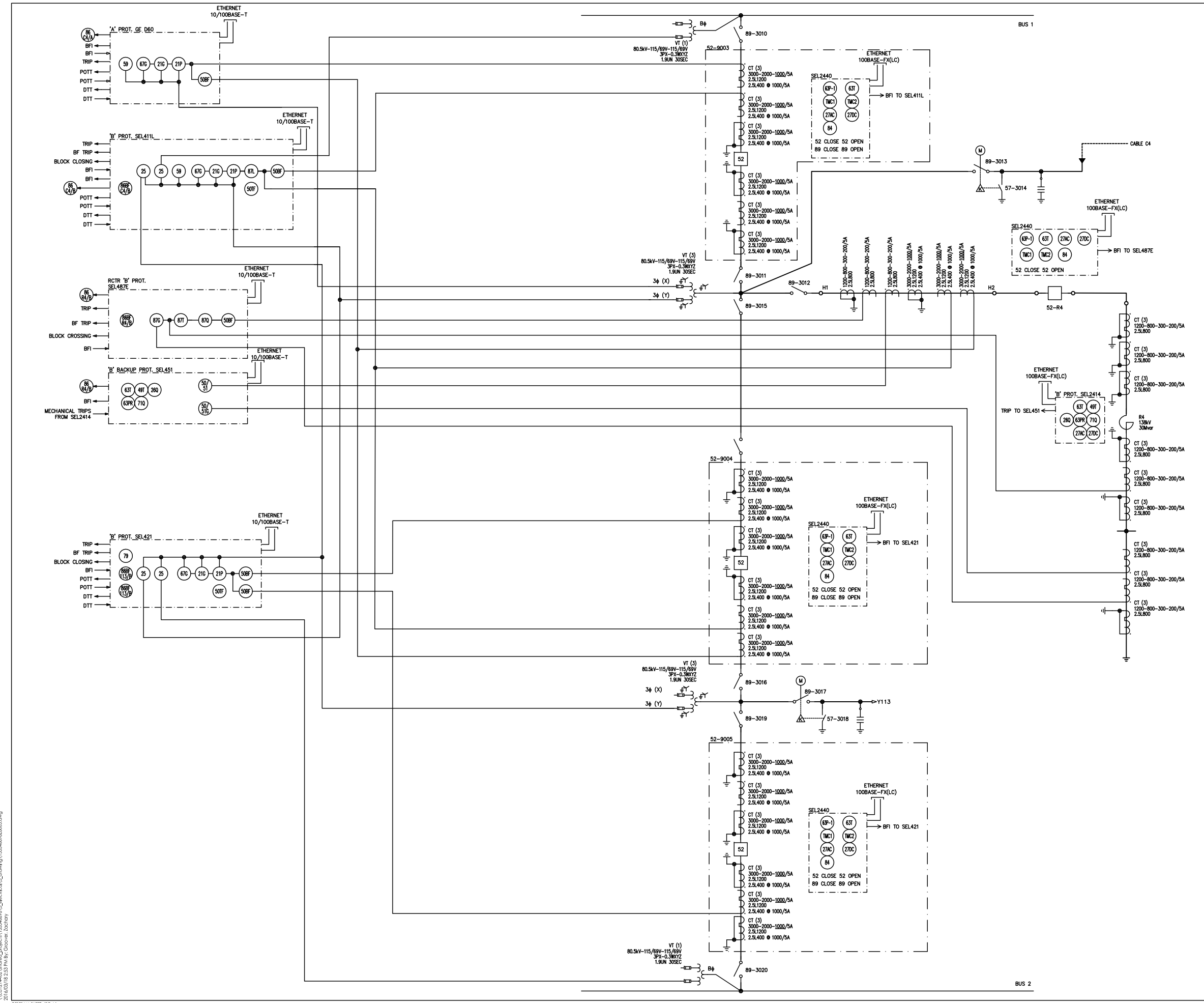

Stantec

Stantec
845 Prospect Street
Fredericton, NB E3B 2T7
Tel. 506-452-7000
www.stantec.com

Copyright Reserved
The Contractor shall verify and be responsible for all dimensions. DO NOT scale the drawing - any errors or omissions shall be reported to Stantec without delay.
The Copyrights to all designs and drawings are the property of Stantec. Reproduction or use for any purpose other than that authorized by Stantec is forbidden.

Client

MARITIME ELECTRIC
A FORTIS COMPANY

Notes

1. THE PROTECTION SYSTEM SHALL BE PROVIDED WITH THE PROVISION OF ADDING 'B' PROTECTION FOR THE REACTOR R4 AND LINE Y13 IN THE FUTURE.
2. POTT AND DTT ON LINE Y113 WILL BE SENT RFL IMUX 2000. AS PER DRAWING E-7002

Revision	By	Appd.	YY.MM.DD
D GENERAL REVISION	ZG	HF	16.03.17
C GENERAL REVISION	JM	HF	16.03.01
B GENERAL REVISION	JM	HF/HK	16.02.02

Issued	By	Appd.	YY.MM.DD
D ISSUED FOR PCT TENDER	ZG	HF	16.03.17
C ISSUED FOR PCT TENDER	DGM	HF	16.03.09
B ISSUED FOR REVIEW	JM	HF/HK	16.01.18
A ISSUED FOR REVIEW	JM	HF/HK	15.12.04

File Name: 133546898E8003.DWG	Dwn.	Chkd.	Dsgn.	YY.MM.DD
	JM		HF/HK	15.12.03

Permit-Seal

PRELIMINARY
NOT FOR CONSTRUCTION

Client/Project
MARITIME ELECTRIC COMPANY, LIMITED

BORDEN SUBSTATION AND
CAPE TORMENTINE RISER STATION
Borden, PEI

Title
PROTECTION AND CONTROL SLD
BORDEN SUBSTATION
Y113 & CABLE #4

Project No. 133546898
Scale

Drawing No. E-8003
Sheet 1 of 1
Revision D

ORIGINAL SHEET - ISO A1

APPENDIX 4

133546898E-8004

(This report includes the latest drawing available at the time of the report issue. Consult the project drawing log for the latest version of the drawing.)

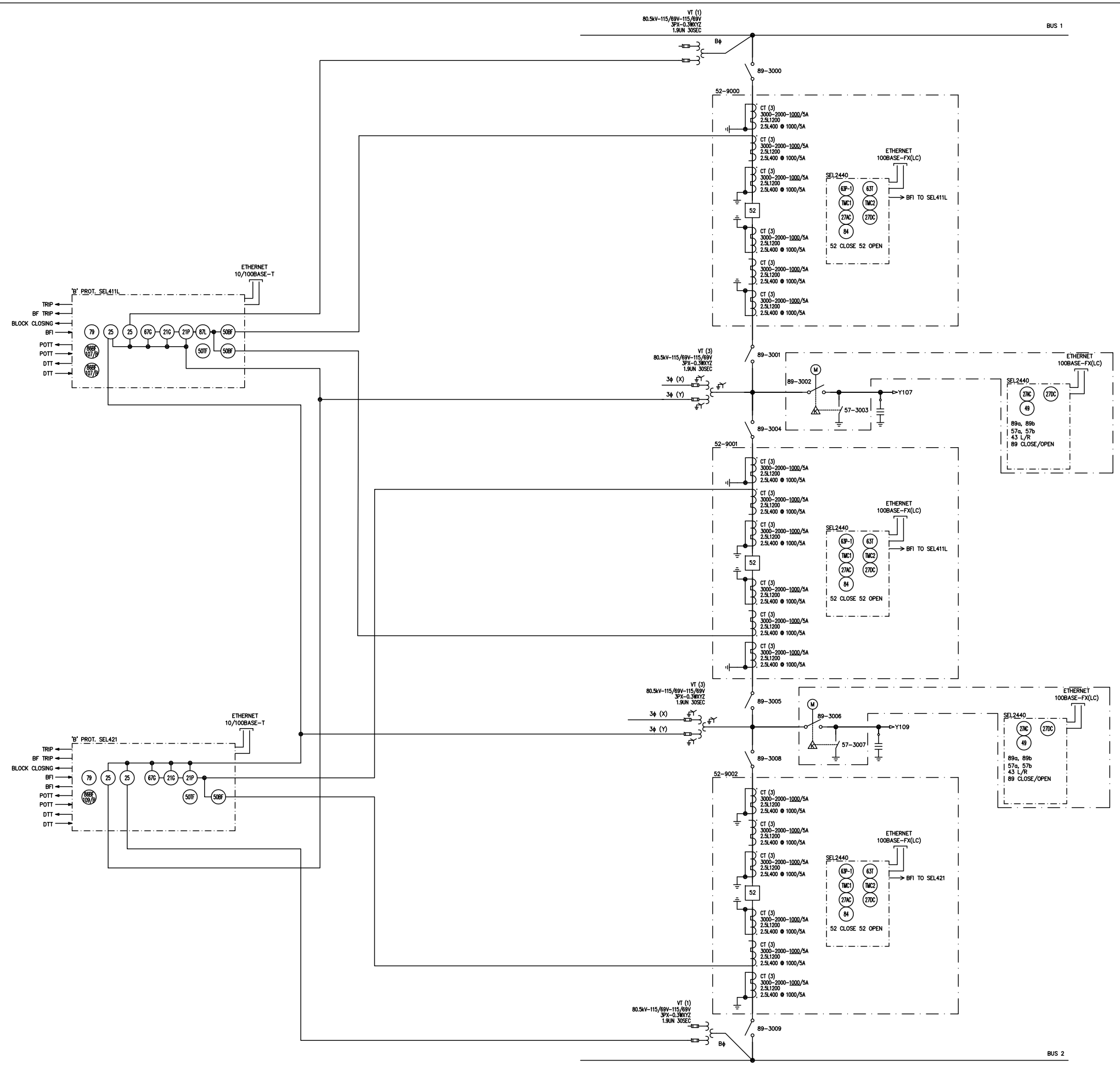

Stantec

Stantec
845 Prospect Street
Fredericton, NB E3B 2T7
Tel. 506-452-7000
www.stantec.com

Copyright Reserved
The Contractor shall verify and be responsible for all dimensions. DO NOT scale the drawing - any errors or omissions shall be reported to Stantec without delay.
The Copyrights to all designs and drawings are the property of Stantec. Reproduction or use for any purpose other than that authorized by Stantec is forbidden.

Client

MARITIME ELECTRIC
A FORTIS COMPANY

Notes

1. THE PROTECTION SYSTEM SHALL BE PROVIDED WITH THE PROVISION OF ADDING 'A' PROTECTION FOR THE REACTOR LINE Y107 AND LINE Y109 IN THE FUTURE.
2. BREAKER FAILURE INITIATION FROM SEL2440 MONITORING MODULE OF THE BREAKER

Revision	By	Appd.	YY.MM.DD
D GERNEAL REVEBION	ZG	HF	16.03.17
C GENERAL REVEBION	JM	HF	16.03.01
B GENERAL REVEBION	JM	HF/HK	16.02.02

Issued	By	Appd.	YY.MM.DD
D ISSUED FOR PCT TENDER	ZG	HF	16.03.17
C ISSUED FOR PCT TENDER	DGM	HF	16.03.09
B ISSUED FOR REVIEW	JM	HF/HK	16.02.02
A ISSUED FOR REVEW	JM	HF/HK	15.12.04

File Name: 133546898E8004.DWG	Dwn.	Chkd.	Dsgn.	YY.MM.DD
	JM		HF/HK	15.12.03

Permit-Seal

PRELIMINARY
NOT FOR CONSTRUCTION

Client/Project
MARITIME ELECTRIC COMPANY, LIMITED

BORDEN SUBSTATION AND
CAPE TORMENTINE RISER STATION
Borden, PEI

Title
PROTECTION AND CONTROL SLD
BORDEN SUBSTATION
Y107 & Y109

Project No. 133546898
Scale

Drawing No. E-8004
Sheet 1 of 1
Revision D

\\Ccl121s402\shared_projects\133546898\3_Electrical\3_Drawing\133546898E8004.dwg
2016-03-18 2:26 PM by: Gerard, Zachary

ORIGINAL SHEET - ISO A1

APPENDIX 5

133546898E-8005

(This report includes the latest drawing available at the time of the report issue. Consult the project drawing log for the latest version of the drawing.)

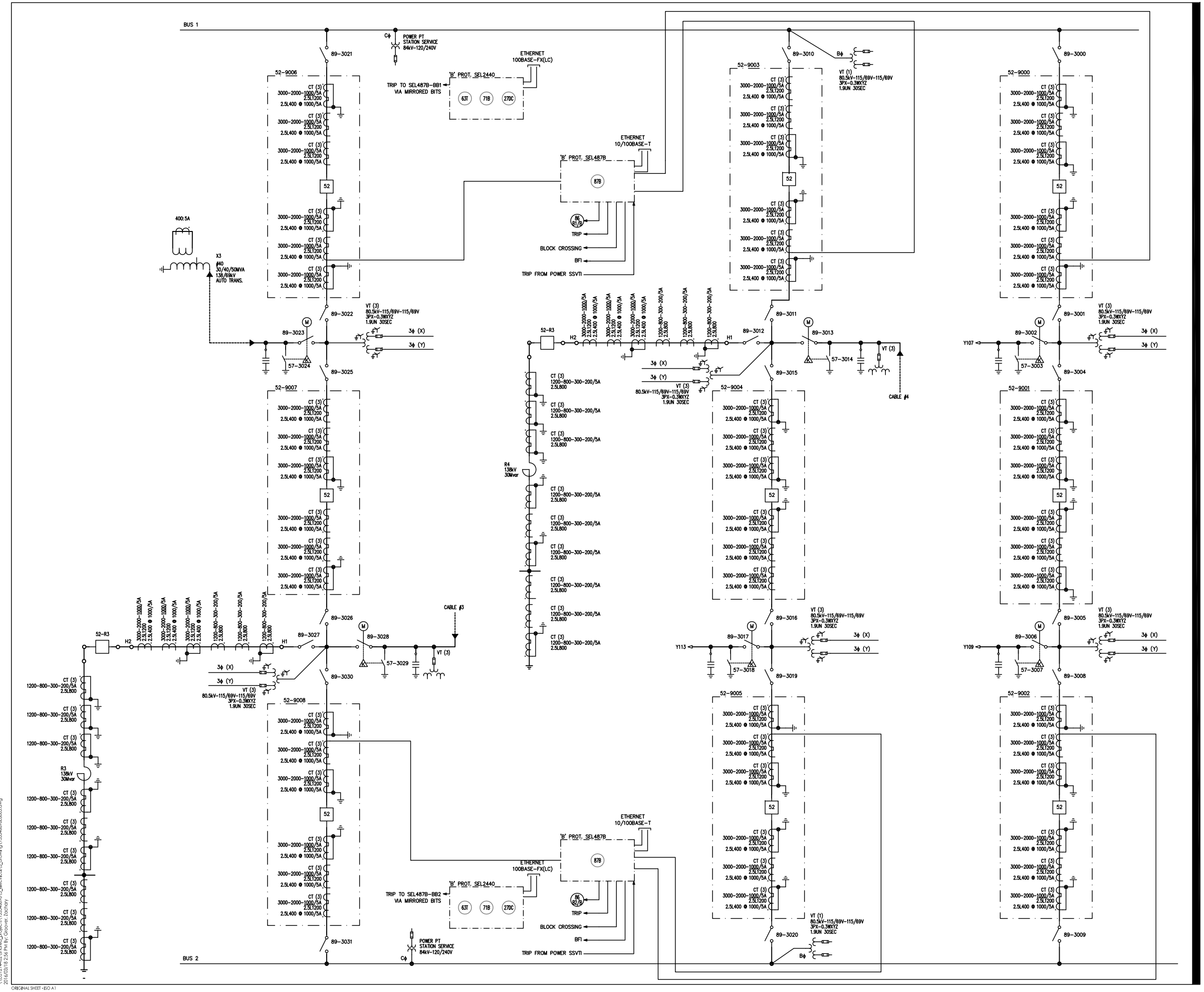

Stantec

Stantec
845 Prospect Street
Fredericton, NB E3B 2T7
Tel. 506-452-7000
www.stantec.com

Copyright Reserved

The Contractor shall verify and be responsible for all dimensions. DO NOT scale the drawing - any errors or omissions shall be reported to Stantec without delay.
The Copyrights to all designs and drawings are the property of Stantec. Reproduction or use for any purpose other than that authorized by Stantec is forbidden.

Client

MARITIME ELECTRIC
A FORTIS COMPANY

Notes

1. THE PROTECTION SYSTEM SHALL BE PROVIDED WITH THE PROVISION OF ADDING A 'B' PROTECTION FOR BUS1/BUS2 IN THE FUTURE.

Revision	By	Appd.	YY.MM.DD
D GENERAL REVISION	ZG	HF	16.03.17
C GENERAL REVISION	JM	HF	16.03.01
B GENERAL REVISION	JM	HF/HK	16.02.02

Issued	By	Appd.	YY.MM.DD
D ISSUED FOR PCT TENDER	ZG	HF	16.03.17
C ISSUED FOR PCT TENDER	DGM	HF	16.03.09
B ISSUED FOR REVIEW	JM	HF/HK	16.02.02
A ISSUED FOR REVIEW	JM	HF/HK	15.12.04

File Name: 133546898E8005.DWG	Dwn.	Chkd.	Dsgn.	YY.MM.DD
	JM		HF/HK	15.12.03

Permit-Seal

PRELIMINARY
NOT FOR CONSTRUCTION

Client/Project

MARITIME ELECTRIC COMPANY, LIMITED

BORDEN SUBSTATION AND
CAPE TORMENTINE RISER STATION

Borden, PEI

Title

PROTECTION AND CONTROL SLD
BORDEN SUBSTATION
BUS BAR PROTECTION

Project No.	Scale	
133546898		
Drawing No.	Sheet	Revision
E-8005	1 of 1	D

ORIGINAL SHEET - ISO A1

\\ca1219-k4972\home_projects\133546898_electrical_drawings\133546898E8005.dwg
2016-03-18 2:34 PM by: Graham Kitchener

APPENDIX 6

MECL NB 138KV CABLE PROJECT-NPCC CRITERIA MAPPING SPREADSHEET

Mapping of NPCC Criteria to IESO Departments

NPCC Criteria or Directory	NPCC Criteria or Directory Name	Paragraph No.	Req'ment No.	Effective Date	Text of Requirement
Directory # 4	Bulk Power System Protection Criteria	5.1	R1	1-Dec-09	General Criteria The intent of the criteria established in this Directory is to ensure dependable and secure operation of the protection systems for Bulk Power System facilities. For those protective relays intended for removal of faults from the bulk power system, dependability is paramount, and the redundancy provisions of the criteria shall apply. For Protective relays installed for reasons other than fault sensing such as overload, etc., security is paramount, and the redundancy provisions of the criteria do not apply. The relative effect on the bulk power system of a failure of a protection system to operate when desired versus an unintended operation shall be weighed carefully in selecting design parameters as follows.
Directory # 4	Bulk Power System Protection Criteria	5.2	R2	1-Dec-09	Criteria for Dependability
Directory # 4	Bulk Power System Protection Criteria	5.2.1	R2.1_5.2.1	1-Dec-09	Except as identified otherwise in these criteria, all elements of the bulk power system shall be protected by two protection groups, each of which is independently capable of performing the specified protective function for that element. This requirement also applies during energization of the element.
Directory # 4	Bulk Power System Protection Criteria	5.2.2	R2.2_5.2.2	1-Dec-09	Except as identified otherwise in these criteria, the two protection groups shall not share the same component.
Directory # 4	Bulk Power System Protection Criteria	5.2.3	R2.3_5.2.3	1-Dec-09	Means shall be provided to trip all necessary local and remote breakers in the event that a breaker fails to clear a fault. This protection need not be duplicated.
Directory # 4	Bulk Power System Protection Criteria	5.3	R3	1-Dec-09	Criteria for Security Protection systems shall be designed to isolate only the faulted element, except in those circumstances where additional elements are tripped intentionally to preserve system integrity, or where isolating additional elements has no impact outside the local area.
Directory # 4	Bulk Power System Protection Criteria	5.4	R4	1-Dec-09	Criteria for Dependability and Security
Directory # 4	Bulk Power System Protection Criteria	5.4.1	R4.1_5.4.1	1-Dec-09	The thermal capability of all protection system components shall be adequate to withstand rated maximum short time and continuous loading of the associated protected elements.
Directory # 4	Bulk Power System Protection Criteria	5.4.2	R4.2_5.4.2	1-Dec-09	Communication link availability, critical switch positions, and trip circuit integrity, shall be monitored to allow prompt attention by appropriate operating authorities.
Directory # 4	Bulk Power System Protection Criteria	5.4.3	R4.3_5.4.3	1-Dec-09	When remote access to protection systems is possible, the design shall include security measures to minimize the probability of unauthorized access to the protection systems.
Directory # 4	Bulk Power System Protection Criteria	5.4.4	R4.4_5.4.4	1-Dec-09	Short Circuit Models used to assess protection scheme design and to develop protection settings shall take into account minimum and maximum fault levels and mutual effects of parallel transmission lines. Details of neighboring systems shall be modeled wherever they can affect results significantly.

Mapping of NPCC Criteria to IESO Departments

NPCC Criteria or Directory	NPCC Criteria or Directory Name	Paragraph No.	Req'ment No.	Effective Date	Text of Requirement
Directory # 4	Bulk Power System Protection Criteria	5.5	R5	1-Dec-09	Operating Time Criteria Bulk power system protection shall take corrective action within times determined by studies with due regard to security, dependability and selectivity.
Directory # 4	Bulk Power System Protection Criteria	5.6	R6	1-Dec-09	Current Transformer Criteria Current transformers (CTs) associated with protection systems shall have adequate steady-state and transient characteristics for their intended function as follows:
Directory # 4	Bulk Power System Protection Criteria	5.6.1	R6.1_5.6.1	1-Dec-09	The output of each current transformer secondary winding shall be designed to remain within acceptable limits for the connected burdens under all anticipated fault currents to ensure correct operation of the protection system.
Directory # 4	Bulk Power System Protection Criteria	5.6.2	R6.2_5.6.2	1-Dec-09	The thermal and mechanical capabilities of the CT at the operating tap shall be adequate to prevent damage under maximum fault conditions and normal or emergency system loading conditions.
Directory # 4	Bulk Power System Protection Criteria	5.6.3	R6.3_5.6.3	1-Dec-09	For protection groups to be independent, they shall be supplied from separate current transformer secondary windings.
Directory # 4	Bulk Power System Protection Criteria	5.6.4	R6.4_5.6.4	1-Dec-09	Interconnected current transformer secondary wiring shall be grounded at only one point.
Directory # 4	Bulk Power System Protection Criteria	5.6.5	R6.5_5.6.5	1-Dec-09	Current transformers shall be connected so that adjacent protection zones overlap.
Directory # 4	Bulk Power System Protection Criteria	5.7	R7	1-Dec-09	Voltage Transformer and Potential Devices Criteria Voltage transformers and potential devices associated with protection systems shall have adequate steady-state and transient characteristics for their intended functions as follows:
Directory # 4	Bulk Power System Protection Criteria	5.7.1	R7.1_5.7.1	1-Dec-09	Voltage transformers and potential devices shall have adequate volt-ampere capacity to supply the connected burden while maintaining their relay accuracy over their specified primary voltage range.
Directory # 4	Bulk Power System Protection Criteria	5.7.2	R7.2_5.7.2	1-Dec-09	The two protection groups protecting an element shall be supplied from separate voltage sources. The two protection groups may be supplied from separate secondary windings on one transformer or potential device, provided all of the following requirements are met:
Directory # 4	Bulk Power System Protection	5.7.2.1	R7.2.1_5.7.2.1	1-Dec-09	Complete loss of one or more phase voltages does not prevent all tripping of the protected element;
Directory # 4	Bulk Power System Protection	5.7.2.2	R7.2.2_5.7.2.2	1-Dec-09	Each secondary winding has sufficient capacity to permit fuse protection of the circuit;
Directory # 4	Bulk Power System Protection Criteria	5.7.2.3	R7.2.3_5.7.2.3	1-Dec-09	Each secondary winding circuit is adequately fuse protected.
Directory # 4	Bulk Power System Protection Criteria	5.7.3	R7.3_5.7.3	1-Dec-09	The wiring from each voltage transformer secondary winding shall not be grounded at more than one point.

Mapping of NPCC Criteria to IESO Departments

NPCC Criteria or Directory	NPCC Criteria or Directory Name	Paragraph No.	Req'ment No.	Effective Date	Text of Requirement
Directory # 4	Bulk Power System Protection Criteria	5.8	R8	1-Dec-09	Batteries and Direct Current (DC) Supply Criteria DC supplies associated with protection shall be designed to have a high degree of dependability as follows:
Directory # 4	Bulk Power System Protection Criteria	5.8.1	R8.1_5.8.1	1-Dec-09	No single battery or dc power supply failure shall prevent both independent protection groups from performing the intended function. Each battery shall be provided with its own charger. Physical separation shall be maintained between the two station batteries or dc power supplies used to supply the independent protection groups.
Directory # 4	Bulk Power System Protection Criteria	5.8.2	R8.2_5.8.2	1-Dec-09	Each station battery shall have sufficient capacity to permit operation of the station, in the event of a loss of its battery charger or the ac supply source, for the period of time necessary to transfer the load to the other station battery or re-establish the supply source. Each station battery and its associated charger shall have sufficient capacity to supply the total dc load of the station.
Directory # 4	Bulk Power System Protection Criteria	5.8.3	R8.3_5.8.3	1-Dec-09	A transfer arrangement shall be provided to permit connecting the total load to either station battery without creating areas where, prior to failure of either a station battery or a charger, a single event can disable both dc supplies.
Directory # 4	Bulk Power System Protection Criteria	5.8.4	R8.4_5.8.4	1-Dec-09	The battery chargers and all dc circuits shall be protected against short circuits. All protective devices shall be coordinated to minimize the number of dc circuits interrupted.
Directory # 4	Bulk Power System Protection Criteria	5.8.5	R8.5_5.8.5	1-Dec-09	Dc systems shall be continuously monitored or annunciated to detect abnormal voltage levels (both high and low), dc grounds, and loss of ac to the battery chargers, in order to allow prompt attention by the appropriate operating authorities.
Directory # 4	Bulk Power System Protection Criteria	5.8.6	R8.6_5.8.6	1-Dec-09	Protection group dc sources shall be continuously monitored to detect loss of voltage in order to allow prompt attention by the appropriate operating authorities.
Directory # 4	Bulk Power System Protection Criteria	5.9	R9	1-Dec-09	Station Service ac Supply Criteria On bulk power system facilities there shall be two sources of station service ac supply, each capable of carrying at least all the critical loads associated with protection systems.
Directory # 4	Bulk Power System Protection Criteria	5.10	R10	1-Dec-09	Circuit Breaker No single trip coil failure shall prevent both independent protection groups from performing the intended function. The design of a breaker with two trip coils shall be such that the breaker will operate if both trip coils are energized simultaneously. The correct operation of this design shall be verified by tests.
Directory # 4	Bulk Power System Protection Criteria	5.11	R11	1-Dec-09	Teleprotection Criteria

Mapping of NPCC Criteria to IESO Departments

NPCC Criteria or Directory	NPCC Criteria or Directory Name	Paragraph No.	Req'ment No.	Effective Date	Text of Requirement
Directory # 4	Bulk Power System Protection Criteria	5.11.1	R11.1_5.11.1	1-Dec-09	Communication facilities required for teleprotection shall be designed to have a level of performance consistent with that required of the protection system, and shall meet the following:
Directory # 4	Bulk Power System Protection Criteria	5.11.1.1	R11.1.1_5.11.1	1-Dec-09	Where each of the two protection groups protecting the same bulk power system element requires a communication channel, the equipment and channel for each protection group shall be separated physically and designed to minimize the risk of both protection groups being disabled simultaneously by a single event or condition.
Directory # 4	Bulk Power System Protection Criteria	5.11.1.2	R11.1.2_5.11.1	1-Dec-09	Teleprotection equipment shall be monitored to detect loss of equipment and/or channels to allow prompt attention by the appropriate operating authorities.
Directory # 4	Bulk Power System Protection Criteria	5.11.1.3	R11.1.3_5.11.1	1-Dec-09	Teleprotection equipment shall be provided with means to test for proper signal adequacy.
Directory # 4	Bulk Power System Protection Criteria	5.11.1.4	R11.1.4_5.11.1	1-Dec-09	Teleprotection equipment shall be powered by the substation batteries or other sources independent from the power system.
Directory # 4	Bulk Power System Protection Criteria	5.11.1.5	R11.1.5_5.11.1	1-Dec-09	Except as identified otherwise in these criteria, the two teleprotection groups shall not share the same component.
Directory # 4	Bulk Power System Protection Criteria	.11.1.5.1	R11.1.5.1_5.11	1-Dec-09	The use of a single communication tower for the radio communication systems used by two protection groups protecting a single element is permitted as long as directional diversity of the communication signals is achieved.
Directory # 4	Bulk Power System Protection Criteria	5.12	R12	1-Dec-09	Environment
Directory # 4	Bulk Power System Protection Criteria	5.12.1	R12.1_5.12.1	1-Dec-09	Each separate protection group and teleprotection protecting the same system element shall be on different non-adjacent vertical mounting assemblies or enclosures.
Directory # 4	Bulk Power System Protection Criteria	5.12.2	R12.2_5.12.2	1-Dec-09	Wiring for separate protection groups and teleprotections protecting the same system element shall not be in the same cable.
Directory # 4	Bulk Power System Protection Criteria	5.12.3	R12.3_5.12.3	1-Dec-09	Cabling for separate protection groups and teleprotections protecting the same system element shall be physically separated. This can be accomplished by being in different raceways, trays, trenches, etc.

Mapping of NPCC Criteria to IESO Departments

NPCC Criteria or Directory	NPCC Criteria or Directory Name	Paragraph No.	Req'ment No.	Effective Date	Text of Requirement
Directory # 4	Bulk Power System Protection Criteria	5.12.4	R12.4_5.12.4	1-Dec-09	In the event a common raceway is used, cabling for separate protection groups protecting the same system element shall be separated by a fire barrier.
Directory # 4	Bulk Power System Protection Criteria	5.13	R13	1-Dec-09	Grounding Criteria Station grounding is critical to the correct operation of protection systems. The design of the ground grid directly impacts proper protection system operation and the probability of false operation from fault currents or transient voltages. Each member shall have established as part of its substation design procedures or specifications, a mandatory method of designing the substation ground grid, which:
Directory # 4	Bulk Power System Protection Criteria	5.13.1	R13.1_5.13.1	1-Dec-09	Can be traced to a recognized calculation methodology
Directory # 4	Bulk Power System Protection Criteria	5.13.2	R13.2_5.13.2	1-Dec-09	Considers cable shielding
Directory # 4	Bulk Power System Protection Criteria	5.13.3	R13.3_5.13.3	1-Dec-09	Considers equipment grounding
	#N/A	5.14	R14	#N/A	Transmission Line Protection Criteria
Directory # 4	Bulk Power System Protection Criteria	5.14.1	R14.1_5.14.1	1-Dec-09	Protection system settings shall not constitute a loading limitation as per NERC requirement/standard. In cases where NERC approved exceptions are used the limits thus imposed shall be adhered to as system operating constraints.
Directory # 4	Bulk Power System Protection Criteria	5.14.2	R14.2_5.14.2	1-Dec-09	A pilot protection shall be so designed that its failure or misoperation will not affect the operation of any other pilot protection on that same element.
Directory # 4	Bulk Power System Protection Criteria	5.15	R15	1-Dec-09	Breaker Failure Protection Criteria Means shall be provided to trip all necessary local and remote breakers in the event that a breaker fails to clear a fault, as follows:
Directory # 4	Bulk Power System Protection Criteria	5.15.1	R15.1_5.15.1	1-Dec-09	Breaker failure protection shall be initiated by each of the protection groups which trip the breaker, with the optional exception of a breaker failure protection in an adjacent zone.
Directory # 4	Bulk Power System Protection Criteria	5.15.2	R15.2_5.15.2	1-Dec-09	Fault current detectors shall be used to determine if a breaker has failed to interrupt a fault.

Mapping of NPCC Criteria to IESO Departments

NPCC Criteria or Directory	NPCC Criteria or Directory Name	Paragraph No.	Req'ment No.	Effective Date	Text of Requirement
Directory # 4	Bulk Power System Protection Criteria	5.16	R16	1-Dec-09	Generating Station Protection Criteria All under- and over-frequency protection systems designed to disconnect generators from the power system shall be coordinated with automatic under frequency load shedding programs, in accordance with the Emergency Operation Criteria (Directory #2).
Directory # 4	Bulk Power System Protection Criteria	5.17	R17	1-Dec-09	Automatic Under frequency Load Shedding Protection System Criteria
Directory # 4	Bulk Power System Protection Criteria	5.17.1	R17.1_5.17.1	1-Dec-09	The requirements and guides for the operation of these Protection Systems are detailed in the Emergency Operation Criteria (Directory #2). The guideline for automatic under frequency load shedding protective relaying design is provided in Appendix A of this Directory.
Directory # 4	Bulk Power System Protection Criteria	5.20	R20	1-Dec-09	Analysis of Protection Performance Requirements
Directory # 4	Bulk Power System Protection Criteria	5.20.1	R20.1_5.20.1	1-Dec-09	Bulk power system automatic operations shall be analyzed to determine proper protection system performance. Corrective measures shall be taken promptly if a protection group fails to operate or operates incorrectly.
Directory # 4	Bulk Power System Protection Criteria	5.20.2	R20.2_5.20.2	1-Dec-09	Event and fault recording capability shall be provided to the extent required to permit analysis of system disturbances and protection system performance.
Directory # 4	Bulk Power System Protection Criteria	5.20.3	R20.3_5.20.3	1-Dec-09	Internal clocks in event and fault recording equipment shall be time synchronized to within 2 milliseconds or less of Universal Coordinated Time scale. The time zone shall be clearly identified as either universal time zone or local time zone.
Directory # 4	Bulk Power System Protection	5.20.4	R20.4_5.20.4	1-Dec-09	Each protective relay which trips Bulk Power System equipment shall provide separate target indication.
Directory # 8	System Restoration	5.3.2	R3.2_5.3.2	22-Oct-10	The Transmission Owners and Generator Owners of the key facility shall identify the associated critical components.

Mapping of NPCC Criteria to IESO Departments

NPCC Criteria or Directory	NPCC Criteria or Directory Name	Paragraph No.	Req'ment No.	Effective Date	Text of Requirement
Directory # 12	Underfrequency Load Shedding Program Requirements	5.2.1	R2.1_5.2.1	6-Jan-11	The program shall consist of five stages of load shedding to be provided by entities with 100 MW or more of end-use load connected to its facilities with the following attributes: Stage 1 : Threshold Setting = 59.5 Hz Block Size = 7 percent Total Operating Time (Total operating time is the load-weighted average for all load within a Balancing Authority area, with maximum deviation for any load limited to ±50 ms.) = 300 ms Stage 2 : Threshold Setting = 59.3 Hz Block Size = 7 percent Total Operating Time = 300 ms Stage 3: Threshold Setting = 59.1 Hz Block Size = 7 percent Total Operating Time = 300 ms Stage 4 : Threshold Setting = 58.9 Hz Block Size = 7 percent Total Operating Time = 300 ms Stage 5 (anti stall): Threshold Setting = 59.5 Hz Block Size = 2 percent Total Operating Time = 10 s
Directory # 12	Underfrequency Load Shedding Program Requirements	5.2.2	R2.2_5.2.2	6-Jan-11	The program shall consist of two stages of load shedding to be provided by entities with 50 MW or more and less than 100 MW of end-use load connected to its facilities with the following attributes: Stage 1 : Threshold Setting = 59.5 Hz Block Size = 14 percent Total Operating Time (Total operating time is the load-weighted average for all load within a Balancing Authority area, with maximum deviation for any load limited to ±50 ms.) = 300 ms Stage 2: Threshold Setting = 59.1 Hz Block Size = 14 percent Total Operating Time = 300 ms

Mapping of NPCC Criteria to IESO Departments

NPCC Criteria or Directory	NPCC Criteria or Directory Name	Paragraph No.	Req'ment No.	Effective Date	Text of Requirement
Directory # 12	Underfrequency Load Shedding Program Requirements	5.2.3	R2.3_5.2.3	6-Jan-11	The program shall consist of one stage of load shedding to be provided by entities with 25 MW or more and less than 50 MW of end-use load connected to its facilities with the following attributes: Stage 1 : Threshold Setting = 59.5 Hz Block Size = 28 percent Total Operating Time (Total operating time is the load-weighted average for all load within a Balancing Authority area, with maximum deviation for any load limited to ±50 ms.) = 300 ms
Directory # 12	Underfrequency Load Shedding Program Requirements	5.2.4	R2.4_5.2.4	6-Jan-11	Entities with less than 25 MW of end-use load connected to its facilities are exempt from providing UFLS.
Directory # 12	Underfrequency Load Shedding Program Requirements	5.2.5	R2.5_5.2.5	6-Jan-11	Entities with less than 100 MW of end-use load connected to its facilities may collectively implement by mutual agreement with one or more entities within the same island (BA shall identify the appropriate island for entities participating in the program) identified an aggregated automatic UFLS program that sheds load based on the frequency thresholds in section 5.2.1 as an alternative to implementing the applicable program in section 5.2.2 or 5.2.3.
Directory # 12	Underfrequency Load Shedding Program Requirements	5.2.6	R2.6_5.2.6	6-Jan-11	Under frequency threshold relays shall be set to a nominal total operating time of 300 ms, from the time when frequency passes through the set point to the time of circuit breaker contact opening (including any communications time delay), with a minimum relay operating time to be no less than 100 ms when the rate of frequency decay is 0.2 Hz per second.
Directory # 12	Underfrequency Load Shedding Program Requirements	5.4	R4	6-Jan-11	Generator Under frequency Protection Requirements Generators shall not be tripped for under-frequency conditions in the area above the curve in Figure 1, except as provided for in Sections 5.4.1 and 5.4.2.
Directory # 12	Underfrequency Load Shedding Program Requirements	5.4.1	R4.1_5.4.1	6-Jan-11	It is recognized that, in special cases, requirements may dictate generator trip in the region above the curve. In those cases, the Generator Owner shall so notify its Balancing Authority and shall ensure through alternate arrangements, that automatic load shedding additional to the amount set out in Section 5.2 and in Section 5.3, equivalent (+/- 5%) to the amount of generation to be tripped, is provided. Such cases shall be reviewed by the Task Force on Coordination of Operation.
Directory # 12	Underfrequency Load Shedding Program Requirements	5.4.2	R4.2_5.4.2	6-Jan-11	Generator Owners shall not increase the under frequency trip settings or make other modifications to the existing exempt generators (that trip above the curve in Figure 1) that may cause these generators to, directly or indirectly, trip at a higher frequency.

Mapping of NPCC Criteria to IESO Departments

NPCC Criteria or Directory	NPCC Criteria or Directory Name	Paragraph No.	Req'ment No.	Effective Date	Text of Requirement
A-15	Disturbance Monitoring Equipment	2.0	R1_2.0	23-Aug-07	The term Disturbance Monitoring Equipment (DME) is defined in the NERC Glossary, listed as Reference 1, and is repeated below for convenience: Disturbance Monitoring Equipment (DME) - Devices capable of monitoring and recording system data pertaining to a Disturbance. Such devices include the following categories of recorders: • Sequence of event (SOE) recorders which record equipment response to the event • Fault recorders, which record actual waveform data replicating the system primary voltages and currents. This may include protective relays. • Dynamic Disturbance Recorders (DDRs), which record incidents that portray power system behavior during dynamic events such as low frequency (0.1 Hz – 3 Hz) oscillations and abnormal frequency or voltage excursions. Footnote: Phasor Measurement Units (PMUs) and any other equipment that meets the functional requirements of DMEs may qualify as DMEs. In this document, the terms DME, Sequence of Events Recorders, Fault Recorders, and DDRs all refer to functional capability and not to discrete devices. All of the following applies to all new installations, and modifications to existing installations. Existing DMEs are required to be upgraded to meet these Criteria in accordance with the schedule called for in NERC Standard PRC-018-1. This document shall be provided to the affected Reliability Coordinators (RCs), Transmission Owners (TOs), and Generator Owners (GOs) within 30 calendar days of its approval.
A-15	Disturbance Monitoring Equipment	3.0	R2_3.0	23-Aug-07	Sequence Of Event Recording
A-15	Disturbance Monitoring Equipment	3.1	R2.1_3.1	23-Aug-07	Sequence of Event recording is the responsibility of transmission owners and generation owners. This capability can be provided as part of another device, such as a Supervisory Control And Data Acquisition (SCADA) Remote Terminal Unit (RTU), a generator plant Digital (or Distributed) Control System (DCS) or part of fault recording equipment.
A-15	Disturbance Monitoring Equipment	3.2	R2.2_3.2	23-Aug-07	Sequence of Event recorders shall be provided at all bulk power system substations and at generating units above 50 MW capacity, and at generating plants above 300 MW capacity
A-15	Disturbance Monitoring Equipment	3.3	R2.3_3.3	23-Aug-07	Sequence of Events recording shall monitor the following at each location: - Transmission and Generator circuit breaker positions - Protective Relay tripping for all protection groups - Teleprotection keying & receive
A-15	Disturbance Monitoring Equipment	4.0	R3_4.0	23-Aug-07	Fault Recording

Mapping of NPCC Criteria to IESO Departments

NPCC Criteria or Directory	NPCC Criteria or Directory Name	Paragraph No.	Req'ment No.	Effective Date	Text of Requirement
A-15	Disturbance Monitoring Equipment	4.1	R3.1_4.1	23-Aug-07	Fault recording is the responsibility of transmission owners and generation owners. When adding or replacing a DFR at an existing BPS facility, the TO or GO should complete a notification in accordance with Document C-22.
A-15	Disturbance Monitoring Equipment	4.2	R3.2_4.2	23-Aug-07	Fault recording shall be provided by the TO to determine the current zero time for loss of BPS transmission elements. The current zero time shall be reported as the time of the final current zero on the last phase to interrupt.
A-15	Disturbance Monitoring Equipment	4.3	R3.3_4.3	23-Aug-07	Fault recording capability shall be provided by the GO for generating units above 200 MW capacity.
A-15	Disturbance Monitoring Equipment	4.4	R3.4_4.4	23-Aug-07	Fault recorders shall monitor the following elements at each location where fault recorders are installed: - All BPS Transmission Lines - Autotransformers or phase-shifters connected to BPS busses - Shunt capacitors 345 kV and above - Individual generator interconnections - Dynamic Var Devices - HVDC Terminals - A Transmission Owner may optionally include the monitoring of transformers serving load from a BPS bus.
A-15	Disturbance Monitoring Equipment	4.5	R3.5_4.5	23-Aug-07	Electrical quantities to be recorded for each monitored element shall be sufficient to determine the following: - Three phase-to-neutral voltages. (Common bus-side voltages may be used for lines.) - Three phase currents and neutral currents. - Polarizing currents and voltages, if used. - Frequency. - Active and reactive power.
A-15	Disturbance Monitoring Equipment	4.6	R3.6_4.6	23-Aug-07	Fault recorder record duration shall be a minimum of one (1) second.
A-15	Disturbance Monitoring Equipment	4.7	R3.7_4.7	23-Aug-07	Fault recorder minimum recording rate shall be 16 samples per cycle.
A-15	Disturbance Monitoring Equipment	4.8	R3.8_4.8	23-Aug-07	As a minimum, fault recorders shall be set to trigger for all the following functions: - Protective Relay tripping for all protection groups - Neutral (residual) overcurrent set at 0.2 pu rated CT secondary current - Phase undervoltage set at 0.85 pu
A-15	Disturbance Monitoring Equipment	4.9	R3.9_4.9	23-Aug-07	When local conditions require different settings or additional functions, such situations shall be documented.
A-15	Disturbance Monitoring Equipment	5.0	R4_5.0	23-Aug-07	Dynamic Disturbance Recording (DDR) Capability
A-15	Disturbance Monitoring Equipment	5.1	R4.1_5.1	23-Aug-07	Where the DDR capability is deemed necessary by the Reliability Coordinator, the Reliability Coordinator shall provide guidance in setting triggers and shall monitor the performance of the DDR devices.

Mapping of NPCC Criteria to IESO Departments

NPCC Criteria or Directory	NPCC Criteria or Directory Name	Paragraph No.	Req'ment No.	Effective Date	Text of Requirement
A-15	Disturbance Monitoring Equipment	5.2	R4.2_5.2	23-Aug-07	On an Area basis, there shall be at least ten (10) DDRs per 30,000 MW of peak load, distributed throughout the system, and installed at various types of locations, with consideration given to the following factors: - Major load centers - Major generation clusters - Major voltage sensitive areas - Major transmission interfaces - Major transmission junctions - Elements associated with Interconnection Reliability Operating Limits (IROLs) - Major EHV interconnections between control areas.
A-15	Disturbance Monitoring Equipment	5.3	R4.3_5.3	23-Aug-07	An evaluation of the need for a DDR should be made upon each new major BPS installation and upon each bulk power system station addition or expansion where a fault recorder replacement project is being made. (A field for this purpose will be included in the next revision of Document C-22.)
A-15	Disturbance Monitoring Equipment	5.4	R4.4_5.4	23-Aug-07	DDRs shall monitor the following elements at each location where dynamic recorders are installed: - Most lines such that normal maintenance activities do not interfere with DDR requirements. - Bus voltages
A-15	Disturbance Monitoring Equipment	5.5	R4.5_5.5	23-Aug-07	As a minimum, DDRs shall monitor one phase current per monitored element and two phase-to-neutral voltages of different elements. One of the monitored voltages shall be of the same phase as the monitored current.
A-15	Disturbance Monitoring Equipment	5.6	R4.6_5.6	23-Aug-07	Electrical quantities to be recorded for each monitored element shall be sufficient to determine the following: - Voltage, current, and frequency - Active and reactive power
A-15	Disturbance Monitoring Equipment	5.7	R4.7_5.7	23-Aug-07	DDRs installed after January 1, 2009 shall function as continuous recorders.
A-15	Disturbance Monitoring Equipment	5.8	R4.8_5.8	23-Aug-07	Each device shall sample data at a rate of at least 960 samples per second (16 samples per cycle and shall store the RMS value of electrical quantities at a rate of at least 6 data points per second.)
A-15	Disturbance Monitoring Equipment	5.9	R4.9_5.9	23-Aug-07	The following DDR triggers shall be considered where available based on manufacturers capability: - Rate of change of Frequency - Rate of change of Power - Delta Frequency 20 mHz change - Oscillation of Frequency
A-15	Disturbance Monitoring Equipment	5.10	R4.10_5.10	23-Aug-07	When local conditions require different settings or additional functions, such situations shall be documented.
A-15	Disturbance Monitoring	5.11	R4.11_5.11	23-Aug-07	When DDR triggers are used, duration of triggered records shall be a minimum of sixty (60) seconds.
A-15	Disturbance Monitoring Equipment	6.0	R5_6.0	23-Aug-07	Data

Mapping of NPCC Criteria to IESO Departments

NPCC Criteria or Directory	NPCC Criteria or Directory Name	Paragraph No.	Req'ment No.	Effective Date	Text of Requirement
A-15	Disturbance Monitoring Equipment	6.1	R5.1_6.1	23-Aug-07	Recorded disturbance data from DMEs shall be forwarded within 30 days of receipt of the request in each of the following cases: - Request from NERC Disturbance Investigation Team - Request from NPCC Disturbance Investigation Team - Reliability Coordinator Request
A-15	Disturbance Monitoring Equipment	6.2	R5.2_6.2	23-Aug-07	Data forwarded shall be archived in its native format for a period of 3 years by the TO or GO.
A-15	Disturbance Monitoring Equipment	6.3	R5.3_6.3	23-Aug-07	Disturbance data files shall be provided in a format which is capable of being viewed, read, and analyzed with a generic COMTRADE analysis tool (8).
A-15	Disturbance Monitoring Equipment	6.4	R5.4_6.4	23-Aug-07	Disturbance Data files shall be named in conformance with IEEE C37.232 Recommended Practice for Naming Time Sequence Data Files.
A-15	Disturbance Monitoring Equipment	6.5	R5.5_6.5	23-Aug-07	Fault Recorder and DDR Files shall contain all monitored channels. SOE records shall contain station, date, time resolved to milliseconds, SOE point name, status.
A-15	Disturbance Monitoring Equipment	6.6	R5.6_6.6	23-Aug-07	Recorded data from each disturbance shall be retrievable for 10 calendar days. This requirement does not apply to relays unless those relays are designated as DME.
A-15	Disturbance Monitoring Equipment	6.7	R5.7_6.7	23-Aug-07	The TO and GO shall each maintain and be ready to report to NPCC on request the following data on the DMEs installed to meet this standard: - Type of DME - Make and model of equipment - Installation location - Operational Status - Date last tested - Monitored Elements - Monitored Devices - Monitored Electrical Quantities
A-15	Disturbance Monitoring Equipment	7.0	R6_7.0	23-Aug-07	Internal clocks in DME devices shall be time synchronized to within 2 milliseconds or less of Coordinated Universal Time (UTC) scale. The time zone shall be clearly identified as either universal time zone or local time zone.
A-15	Disturbance Monitoring Equipment	8.0	R6_8.0	23-Aug-07	Maintenance and Testing Each TO, and GO shall establish a maintenance and testing program for DME (guidance for maintenance and testing is provided in Document B-26) that includes: -

APPENDIX 7

MECL/NB LINE DIFFERENTIAL PROTECTION CONFIGURATION

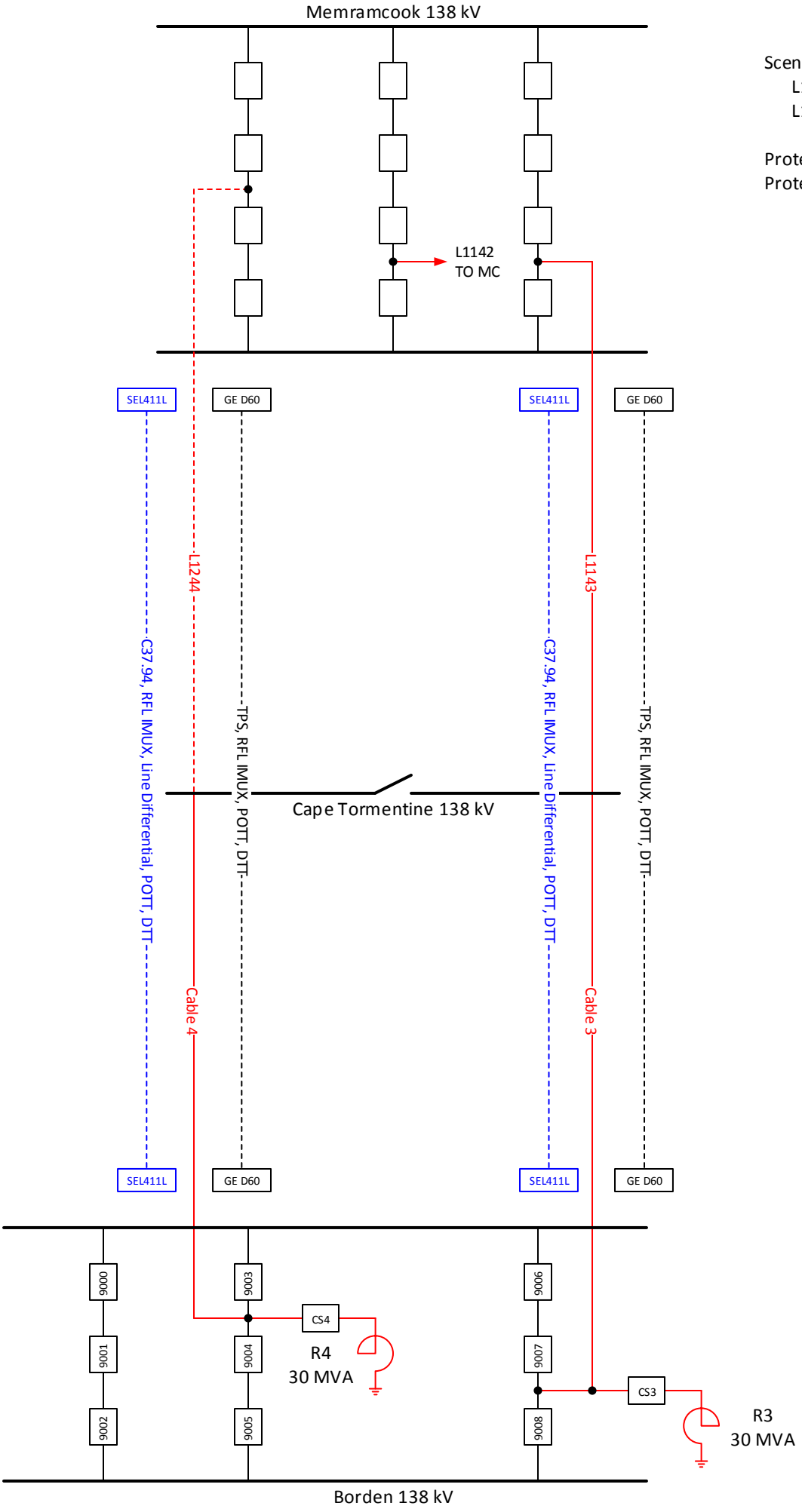

Scenario 1:
L1143 to Cable 3
L1244 to Cable 4

Protection A: GE D60
Protection B: SEL411L

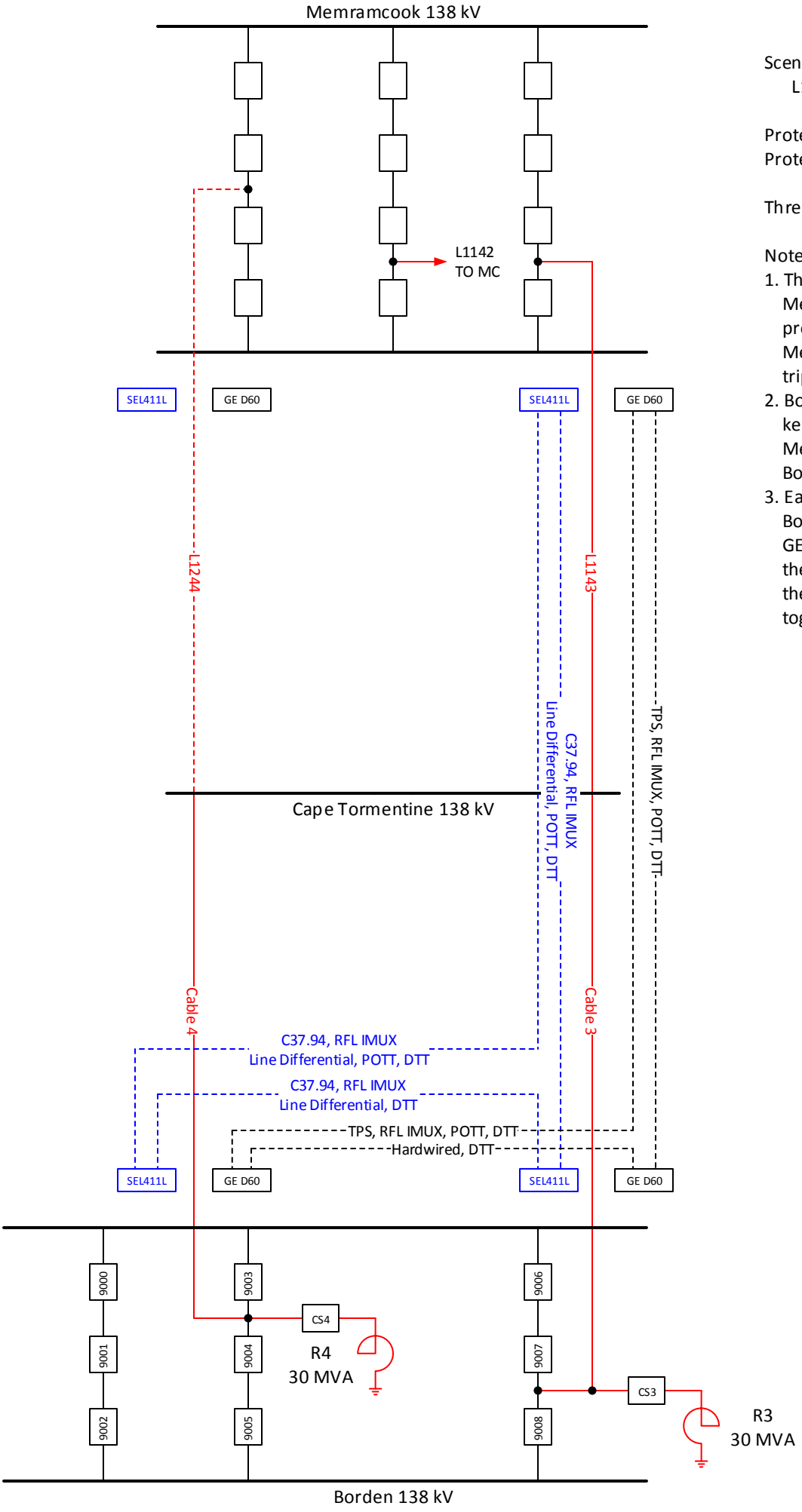

Scenario 2:
L1143 to Cable 3 & Cable 4

Protection A: GE D60
Protection B: SEL411L

Three Terminal Line Diff/POTT

Note
1. The permissive from Memramcook will go into both protections at Borden (zone 2 + Mem_permissive = accelerated trip)
2. Both GE-D60 relays at Borden will key a single permissive tone to Memramcook (zone 2 + Bor_permissive = accelerated trip).
3. Each of the GE-D60 protections at Borden will direct trip the second GE-D60 protection at Borden in the event that it trips. Effectively, their trip busses will be tied together.

APPENDIX 8

MECL/NB 138KV INTERCONNECTION CABLE-ONE LINE DIAGRAM

Cable3 and 4 Interconnection
With NB and PEI 138kV Network

Existing Facilities in BLACK

Cable 3/4 Facilities in RED

New lines from Memramcook in ORANGE

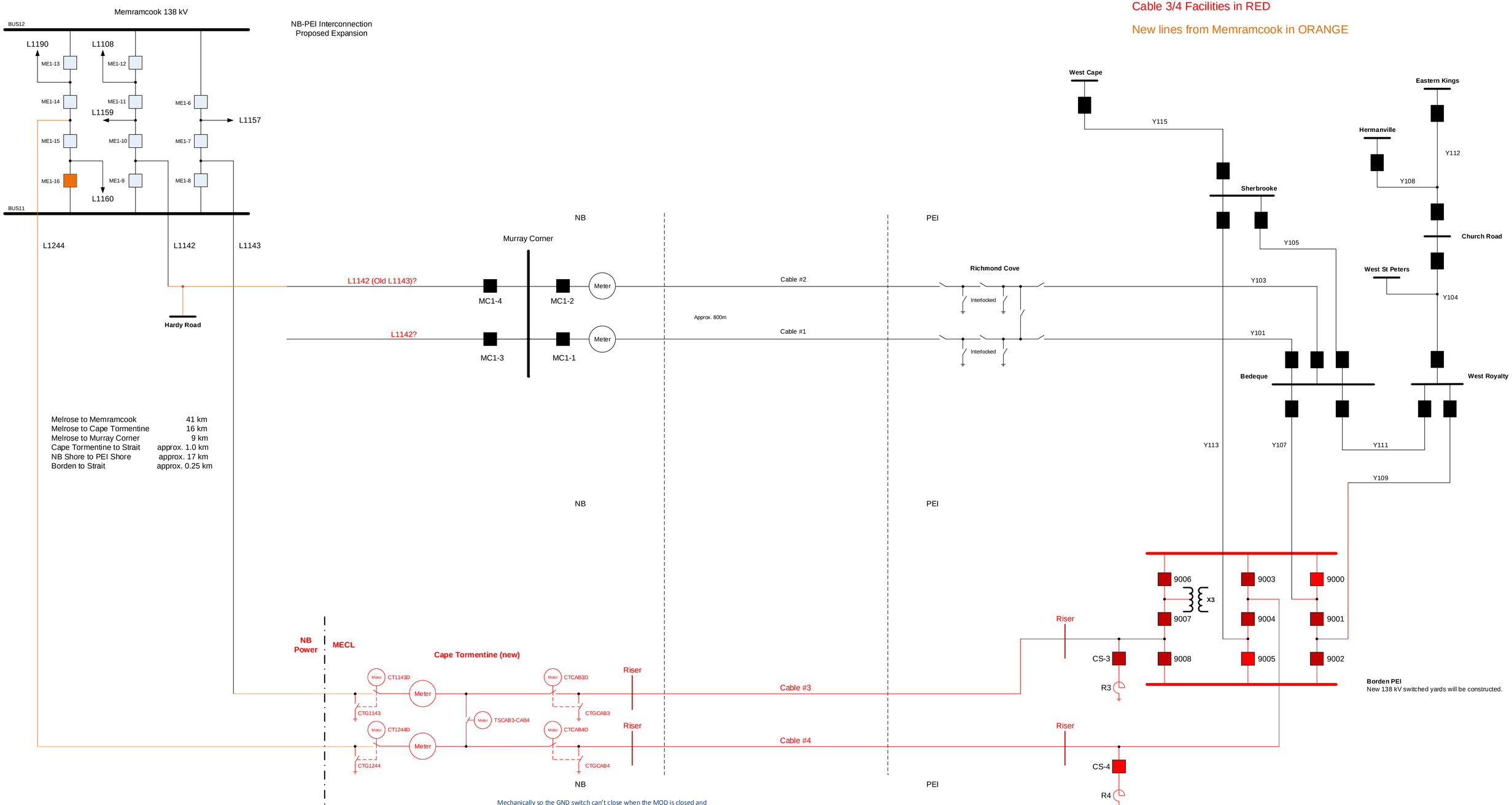

Melrose to Memramcook	41 km
Melrose to Cape Tormentine	16 km
Melrose to Murray Corner	9 km
Cape Tormentine to Strait	approx. 1.0 km
NB Shore to PEI Shore	approx. 17 km
Borden to Strait	approx. 0.25 km

Mechanically so the GND switch can't close when the MOD is closed and Electrically so the MOD can't close when the gnd switch is closed. There would be no mechanical interlock to automatically close the GND switch when the MOD is opened.
For cable testing, the MOD may be opened with the GND not being closed.

APPENDIX 9

NETWORK ARCHITECTURE BORDEN SUBSTATION

COMMUNICATION BLOCK DIAGRAM

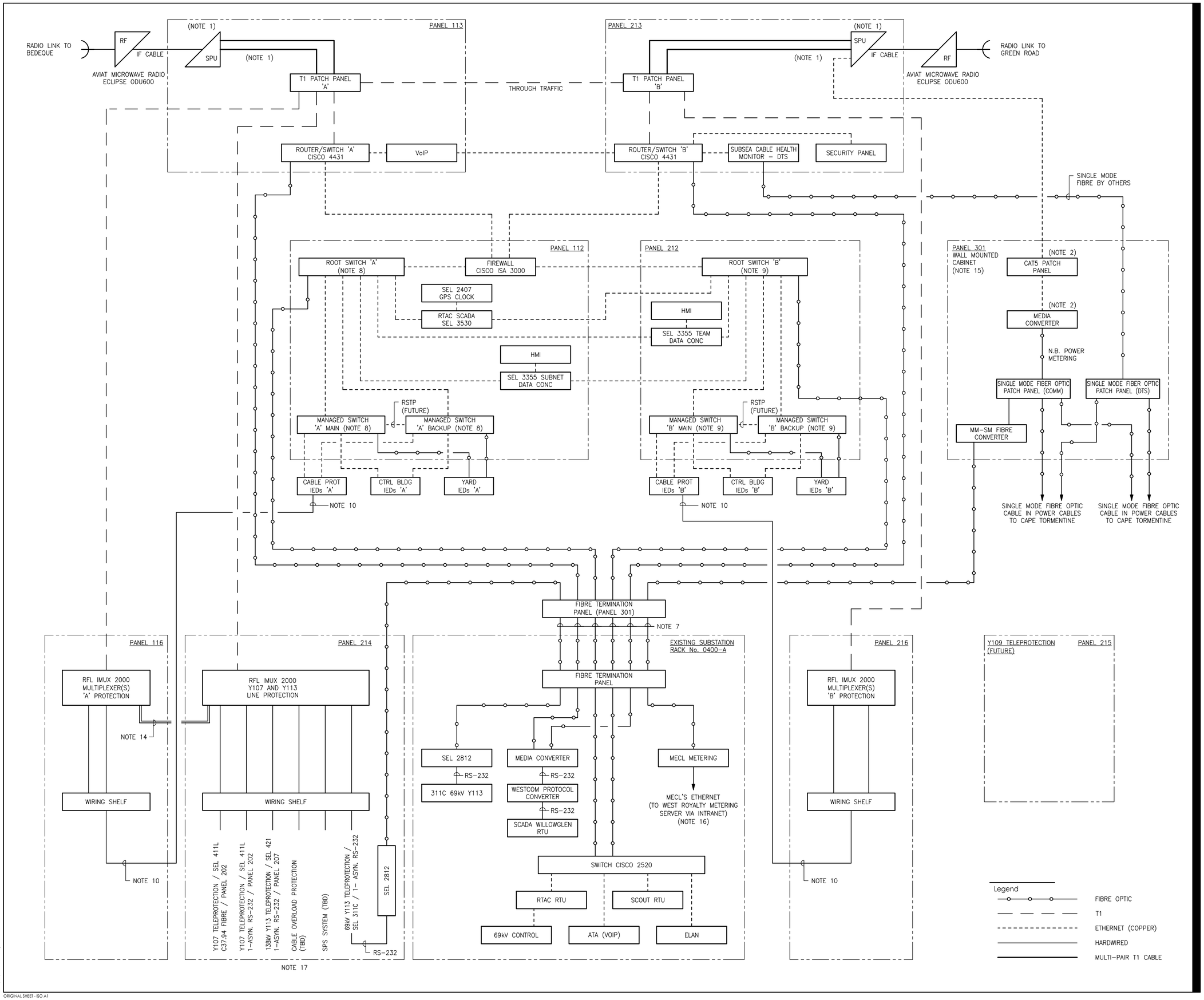

U:\133546898\3-electrical\3-drawings\133546898E7002.dwg
2016/03/21 2:29 PM By: Hetchel, Josh

ORIGINAL SHEET - ISO A1

Stantec

Stantec
845 Prospect Street
Fredericton, NB E3B 2T7
Tel. 506-452-7000
www.stantec.com

Copyright Reserved

The Contractor shall verify and be responsible for all dimensions. DO NOT scale the drawing - any errors or omissions shall be reported to Stantec without delay.
The Copyrights to all designs and drawings are the property of Stantec. Reproduction or use for any purpose other than that authorized by Stantec is forbidden.

Client

MARITIME ELECTRIC
A FORTIS COMPANY

Notes

1. AVIAT RADIOS TO BE SUPPLIED BY OTHERS AND WILL BE SUPPLIED TO THE PCT BUILDING VENDOR FOR INSTALLATION. THE OUTDOOR RF UNIT AND RADIO FEEDLINE TO BE SUPPLIED BY OTHERS, AND INSTALLED BY THE GENERAL CONTRACTOR.
2. NB POWER METERING CONFIGURATION.
3. CONFIGURATION OF THE ROUTERS, SWITCHES, AND FIREWALL SHALL BE CONFIGURED BY THE PCT BUILDING VENDOR WITH THE PRESENCE OF MECL PERSONNEL.
4. CONFIGURATION OF THE MICROWAVE HARDWARE SHALL BE CONFIGURED BY THE RADIO SUPPLIER.
5. ALL CABLING TO BE SUPPLIED BY THE PCT BUILDING CONTRACTOR.
6. ALL GROUNDING TO BE INSTALLED AS PER SPECIFICATION.
7. NEW MULTI–MODE FIBRE OPTIC CABLE BETWEEN EXISTING SUBSTATION AND NEW CONTROL BUILDING BY BUILDING CONTRACTOR.
8. ALL MANAGED SWITCHES ON LAN 'A' WILL BE RUGGEDCOM RSG–2100.
9. ALL MANAGED SWITCHES ON LAN 'B' WILL BE SEL 2730M.
10. INTERFACE BETWEEN TELEPROTECTION EQUIPMENT AND IED's TO BE DEFINED AS PER SECTION 4.1.2.7 IN PROTECTION AND CONTROL PHILOSOPHY.
11. SUFFICIENT NUMBER OF MANAGED SWITCHES WILL BE USED TO ENSURE ALL IEDs WILL BE CONNECTED TO THE NETWORK. ONE MAIN AND ONE BACKUP MANAGED SWITCH PER DIAMETER AND PER PROTECTION SYSTEM.
12. Y109 TELEPROTECTION IS NOT SHOWN ON THIS BLOCK DIAGRAM AS THIS PROTECTION DOES NOT AFFECT THE NEW TELECOM SYSTEM.
13. ALL FIBRE OPTIC CABLES SHALL BE MULTI MODE EXCEPT WHERE NOTED.
14. DROP AND INSERT COMMUNICATION LINK BETWEEN IMUX 2000 UNITS.
15. WALL MOUNTED CABINET TO BE MOUNTED ON THE MARSHALLING RACK WALL.
16. METERING DATA WILL BE SENT TO RTAC SCADA FOR DISPLAY AT ECC. WIRING TO BE DONE BY OTHERS,
17. Y113 69kV AND 138kV TELEPROTECTION INPUT RS–232 SIGNALS WILL BE SWITCHED BY PANEL MOUNTED SWITCH.

Revision		By	Appd.	YY.MM.DD
D	GENERAL REVISION	JMH	MHG	16.03.21
C	GENERAL REVISION	DGM	MHG	16.03.09
B	GENERAL REVISION	DGM	MHG	16.02.24

Issued		By	Appd.	YY.MM.DD
D	ISSUED FOR TENDER	JMH	MHG	16.03.21
C	ISSUED FOR TENDER	DGM	MGH	16.03.09
B	ISSUED FOR REVIEW	DGM	MHG	16.03.04
A	ISSUED FOR REVIEW	DGM	MHG	16.02.17

File Name: 133546898E7002.DWG	Dwn. DGM	Chkd.	Dsgn. MHG	YY.MM.DD 16.02.11

Permit-Seal

PRELIMINARY
NOT FOR CONSTRUCTION

Client/Project
MARITIME ELECTRIC COMPANY, LIMITED

BORDEN SUBSTATION AND
CAPE TORMENTINE RISER STATION
Borden, PEI

Title
NETWORK ARCHITECTURE
BORDEN SUBSTATION
COMMUNICATIONS BLOCK DIAGRAM

Project No.	Scale	
133546898	NTS	
Drawing No.	**Sheet**	**Revision**
E-7002	of	D