Maritime Electric Company Ltd.
Charlottetown, PE

133546898S301
Borden Substation and Cape Tormentine
Riser Station Construction
Request for Tender 2016-18

This addendum shall form part of the contract for the Request for Tender 2016-18 (Stantec Specification No. 133546898S301), and will alter and take precedence over any provisions of which this addendum is in conflict.

Please be advised of the following additions, deletions, changes, or clarifications.

1. Clarification - Section 010005, 1.3.1.2

The Contractor shall include for removal and disposal of existing barn foundation. Contractor to coordinate with New Brunswick Solid Waste Commission (South East Division): http://www.nbse.ca/solidwaste/business Telephone: (506) 877-1040.

2. Clarification – Substation Bus Bar

Insulator connections to the bus are bolted. Splices required to achieve the required bus length shall be welded.

3. Clarification – Disconnect Switches

Disconnects will be shipped with insulators pre-installed. The Contractor does not need to install the insulators on the disconnect switches on-site.

4. Clarification – Laydown Area

The Contractor shall be responsible for a laydown area. The area is approximately 2.5 acres and will be located roughly as shown on the attached sketch (to be finalized following award). Preparation of the laydown area will be by the Contractor. A temporary access road to the area will be provided by others. Reclamation of the laydown area following construction will be by others.

5. Clarification – Overburden

The Contractor shall stockpile overburden on site (northwest of the laydown area) and use as needed during construction. Overburden remaining (after construction is complete) will be handled by others.

6. Clarification – Cable Schedules

The Contractor may use (at their risk) the attached cable schedules in excel format to help with bidding. The .pdf files provided along with the RFT shall, however, be considered the Contract documents.

7. Clarification – Owner Supplied Equipment

Please disregard "Conditions of Contract" Section 3.6. Please refer to Section 010005, Item 3.1 for a description of equipment supplied by the Owner. Tentative delivery to site dates of some Owner supplied equipment is as follows:

Items	Vendor	Date (Tentative)
CTs (Qty 7) / PTs (Qty 27) / SSVTs (Qty 4)	Arteche	August 19, 2016
138kV U/G Cables (Qty 750m - 1 Reel)	UWC	September 5, 2016
Reactors (Qty 2 x 30MVAr)	ABB	September 12, 2016
138kV Breakers (Qty 9)	MEPPI	August 19, 2016
MODs (Qty 11) & Disc Sw (Qty 20)	Southern States	August 10, 2016
Circuit Switchers (Qty 2)	Southern States	September 6, 2016

8. Clarification - Commissioning

The telecommunications equipment installed within Cabinet 503 in Cape Tormentine will be commissioned by Others.

9. Clarification – Pre-fabricated Substation Trenching

The depth of all the pre-fabricated substation trenching shown on drawing E5201 shall be 16" deep. All trench must be vehicle rated to same specifications trenches listed in specifications and on the contract drawings. Suitable dividers must be provided and trench dimensions must be adhered to. If the Contractor wishes to propose a substitution, the specifics of the proposed substitution must be submitted to the Owner for approval. The Owner may at their discretion reject the proposed substitution.

10. <u>Clarification - Reactors</u>

The Reactors will be delivered to site. The Contractor is responsible for receiving, inspecting, off-loading, and placing the Reactors on their associated pads. The Contractor is responsible to dress the reactors (install bushings & lightning arrestors). Oil top-up is not required. General arrangement drawings are attached for information.

***** End of Addendum 3 *****

Carleton St
Carleton St
Maritime Power Rd
Read Rd
Main St
Read Rd
TEMPORARY ROAD
BY OTHERS
CONTRACTOR
LAYDOWN AREA

We reserve all rights in this document and in the information contained therein. Reproduction, use or disclosure to third parties without express authority is strictly forbidden. © Copyright ABB.

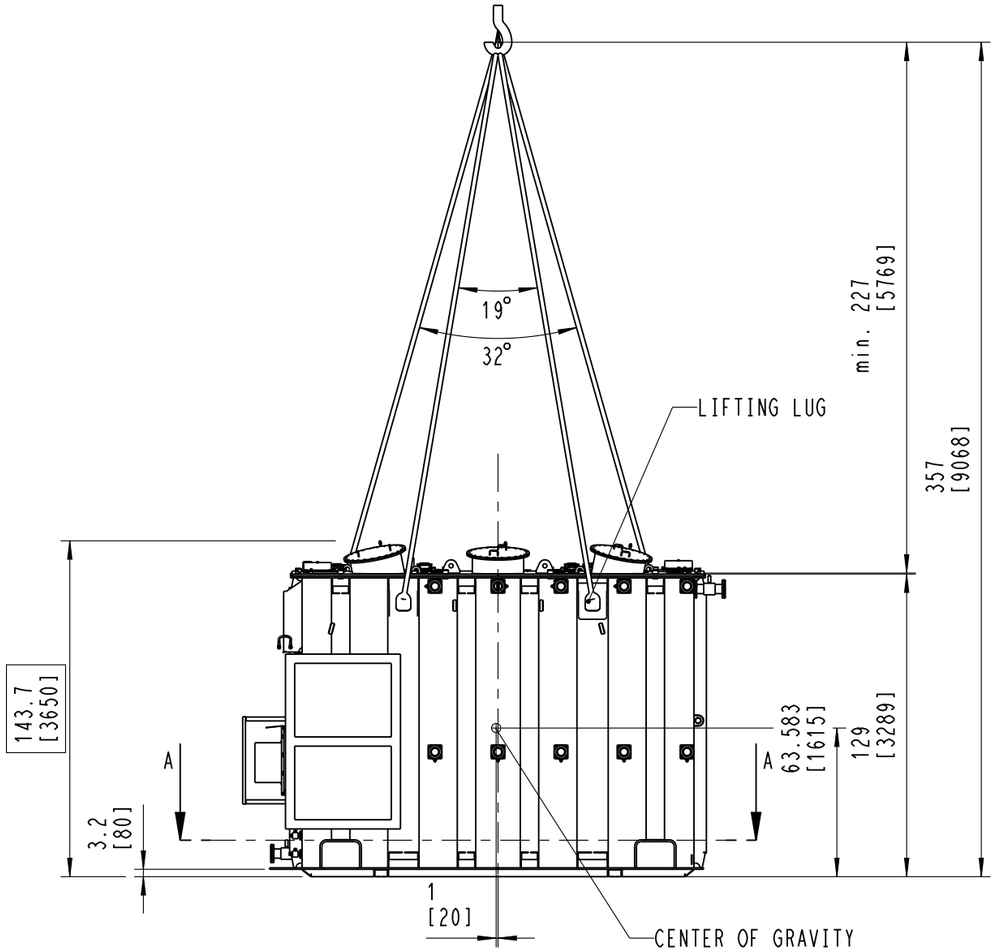

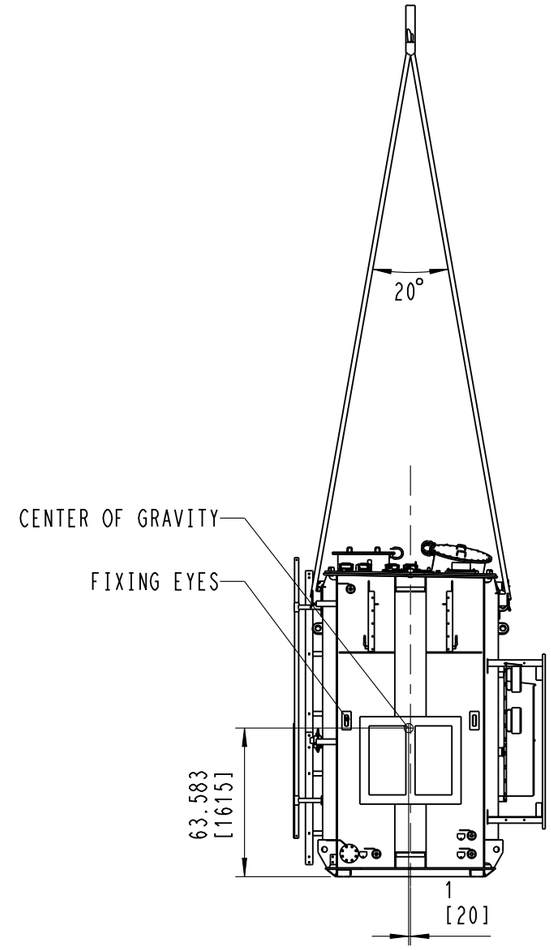

PLACING OF JACKING PLATES

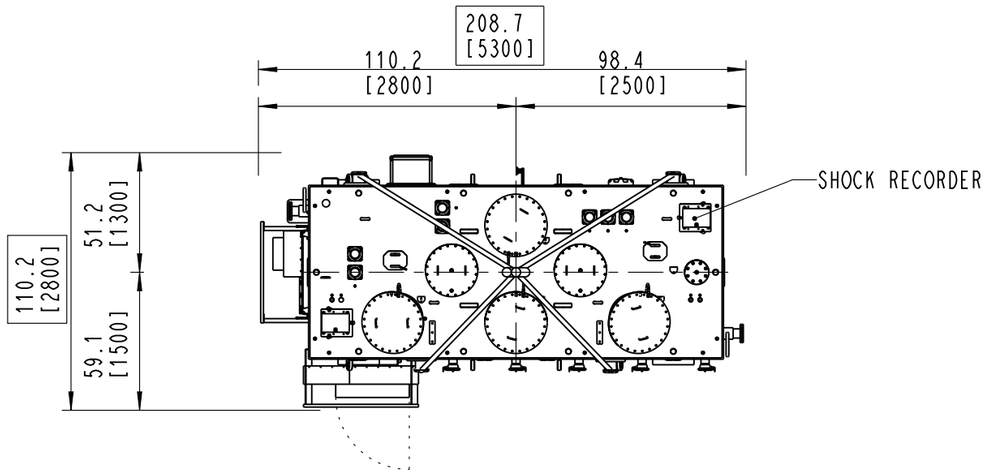

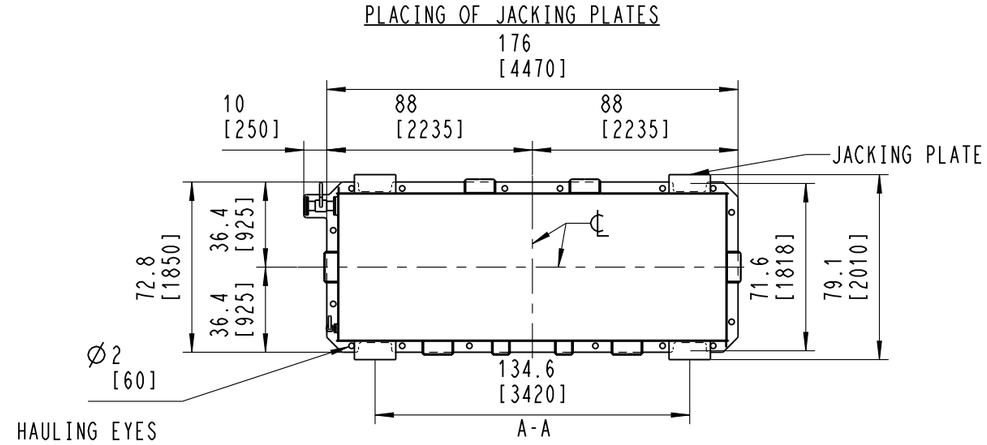

TRANSPORT WEIGHT WITH OIL: 61200 kg

Version	Revision	Prepared	Date

Nimitys / Benämning / Title	TRANSPORTATION DRAWING		Suhde / Skala / Skale 1:50
Osasto / Avdelning / Department: GES	Teki / Ritad / Drawn: 19.11.2015 V.Appel	Liittyy / Hör till / Concerning: 43109281110	Proj.
		Laji / Typ / Type: KKRU 145 NC 33500	Versio / Version A
	Tarkasti / Granskad / Checked: O.Takala	A3 Piirustus No. Ritning Nr. Document No. 1ZXY015501B5498	Sivu / Sida / Page 1
	Hyväksyi / Godkänd / Approved: S.Laine		Kok. / Tot. 1

ABB

13354689 8-1004-01

We reserve all rights in this document and in the information contained therein. Reproduction, use or disclosure to third parties without express authority is strictly forbidden. © Copyright ABB.

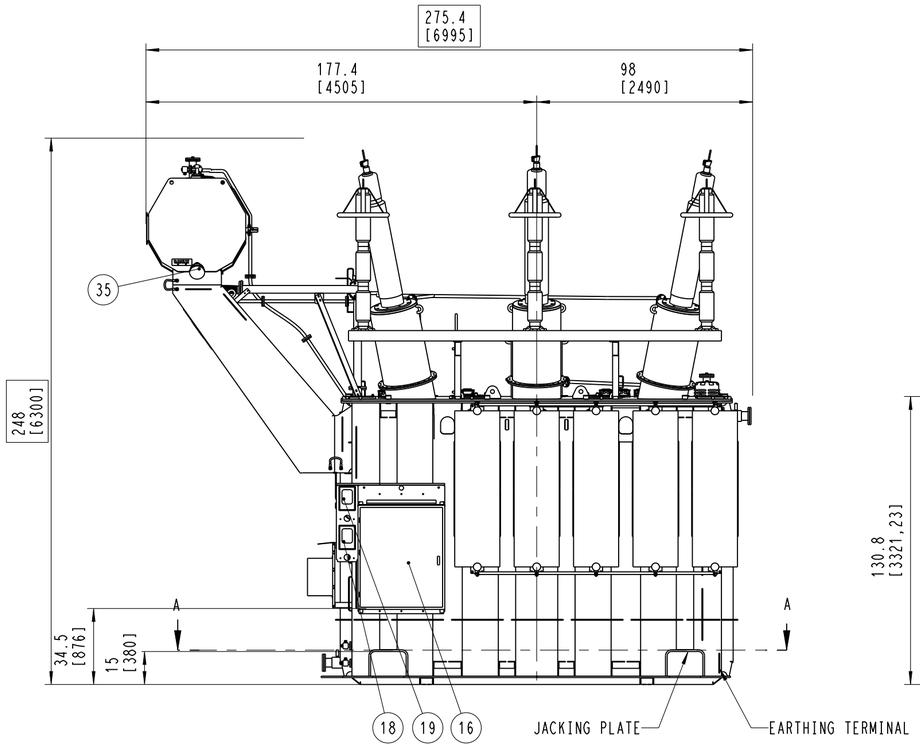

FRONT VIEW

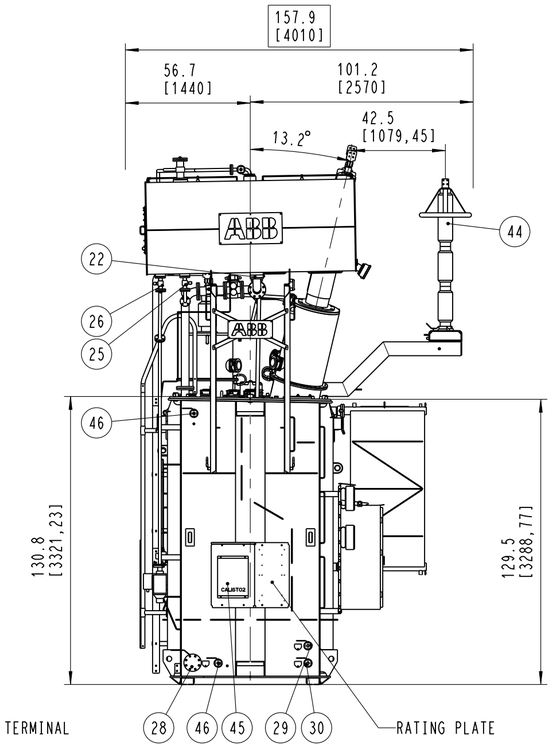

LEFT VIEW

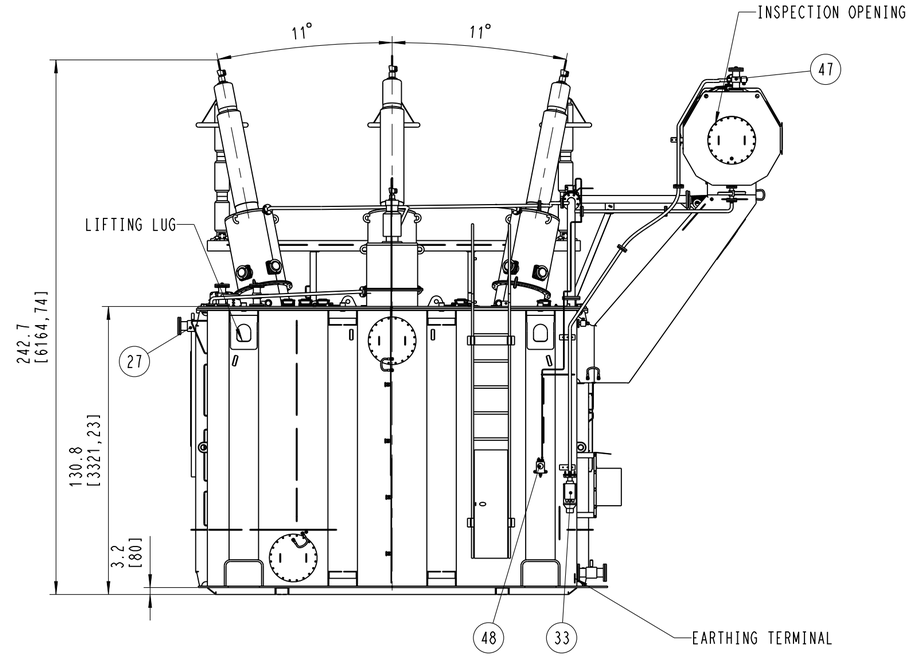

REAR VIEW

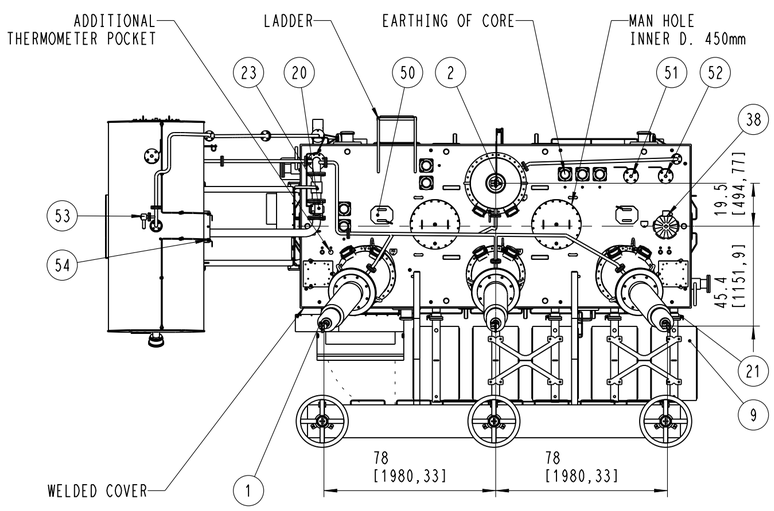

TOP VIEW

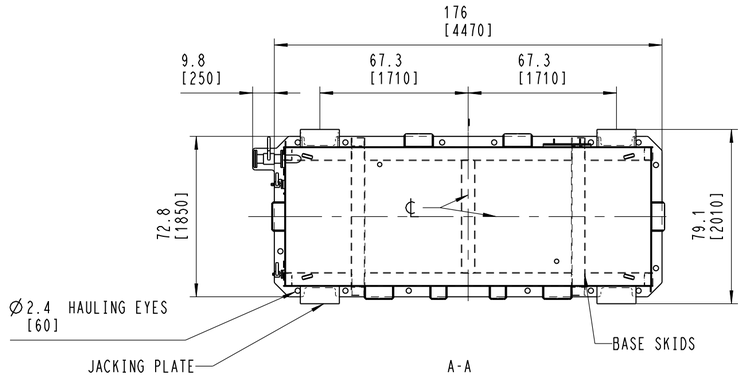

PLACING OF JACKING PLATES

ITEM	PCS	TYPE	DESCRIPTION
(54)	2	YRTC 15KK	AIR BLEEDING VALVE
(53)	1	YRTC 15LK95	TEST VALVE FOR RUPPER SACK
(52)	1	YRTC50LL165 DN50	SPRAY VALVE, VI
(51)	1	YRTC50LL165 DN50	PULLING VALVE, V
50	2	DBI SALA UCL 17412	SAFETY SYSTEM MOUNTING PLACE ANCHORS
(48)	1	KA-ZG 1.2	GAS SAMPLING DEVICE AND TESTING VALVE
(47)	1	YRTC50LL165 DN50	FILLING VALVE FOR OIL CONSERVATOR
(46)	2	YRTC 15LK95 DN15	CALISTO 2 VALVES WITH 1/2 NTP ADAPTERS
45	1	CALISTO 2	GAS MONITORING SYSTEM
44	3	POLIM-S Q120SB098D	SURGE ARRESTER
(38)	1	KAYR-LMPRD 08	PRESSURE RELIEF DEVICE
(35)	1	KAUD-MTO-STF160G-L850 ANALOG	OIL LEVEL INDICATOR
(33)	1	KA-DB100-T-HT	DEHYDRATING BREATHER
(30)	1	YRTC 15LK95 DN15	OIL SAMPLING VALVE (BOTTOM OIL), II
(29)	1	YRTC 15LK95 DN15	OIL SAMPLING VALVE (TOP OIL), II
(28)	1	YRTC 80LL200 DN80	DRAINING AND FILTERING VALVE, I, IV
(27)	1	YRTC 80LL200 DN80	FILLING AND FILTERING VALVE, III
(26)	1	YRTC 15LK115 DN15	DRAINING VALVE FOR OIL CONSERVATOR
(25)	1	YRTC 25LL115 DN25	BY-PASS VALVE FOR BUCHHOLZ RELAY
(23)	1	YRTC 80LL200	SHUT-OFF VALVE FOR BUCHHOLZ RELAY
(22)	1	YRKC 80B30	SHUT-OFF VALVE FOR BUCHHOLZ RELAY
21	10	YRKC 80E70	SHUT-OFF VALVE FOR RADIATOR
(20)	1	OYOS 80G2/8/COM C5-M	BUCHHOLZ RELAY
(19)	1	MESSKO BETECH OTI-6M	OIL THERMOMETER
(18)	1	MESSKO BETECH WTI-6M	WINDING TEMPERATURE INDICATOR
16	1	NOMOS	CONTROL CABINET, 304
9	5	KZLB-TTP-1800X90X20Z	RADIATOR
2	1	ABB ALAMO 035G0400CA	BUSHING N
1	3	ABB ALAMO 145Z0600AA	BUSHING H1,H2,H3

Version	Revision	Prepared	Date
C	Lenght increased 255mm	V.A	08.02.2016
B	Desing Review, 24.11.2015	V.A	30.11.2015

Mittapiirustus
Mättritning
Outline drawing

Nimitys / Benämning / Title: THREE-PHASE OIL-IMMERSED SHUNT REACTOR

Suhde / Skala / Scale: 1:50

Osasto / Avdelning / Department: GES

Tek. / Ritad / Drawn: 19.11.2015 V.Appel

Liittyy / Hör till / Concerning: 43109281110

Proj.

Loj. / Typ / Type: KKRU 145 NC 33500

Versio / Version: C

Tarkasti / Granskad / Checked: O.Takala

Hyväksyi / Godkänd / Approved: S.Laine

A2

Piirustus No. / Ritning Nr. / Document No.: 1ZXY015500B5498

Sivu / Sida / Page: 1

Kok. / Tot.: 3

133546898-1001-03

We reserve all rights in this document and in the information contained therein. Reproduction, use or disclosure to third parties without express authority is strictly forbidden. © Copyright ABB.

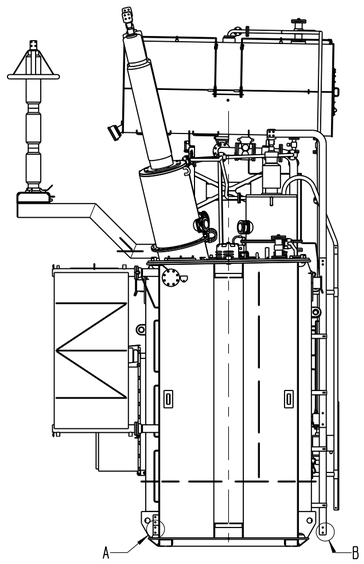

RIGHT VIEW

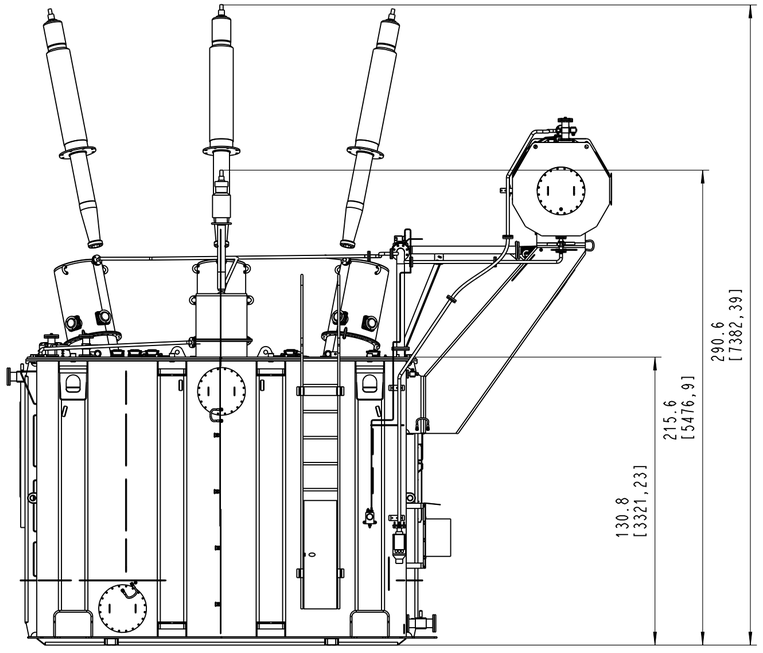

REMOVE BUSHING VIEW

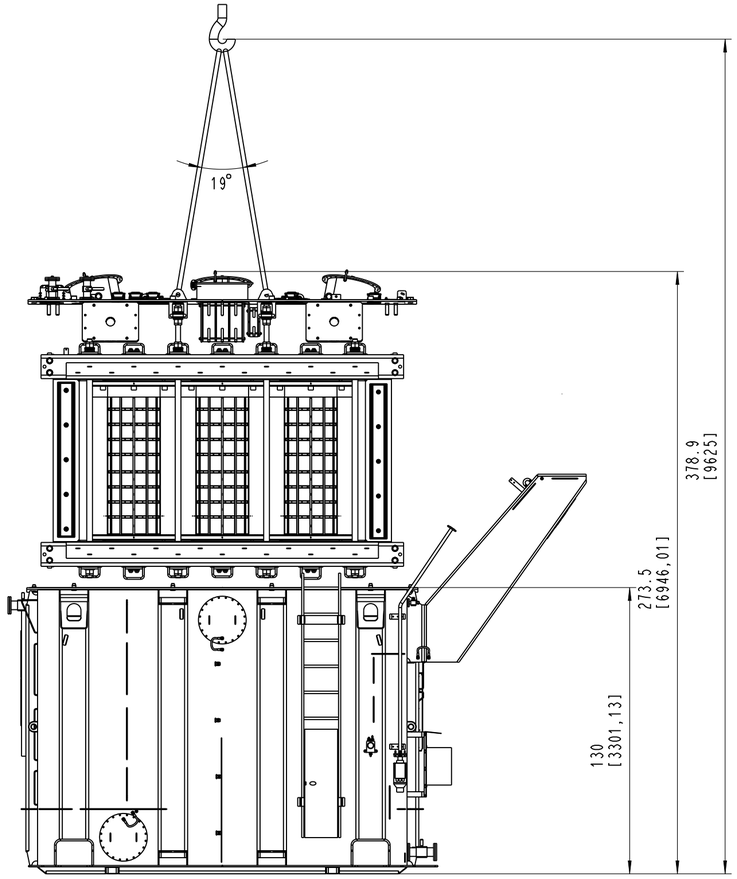

UNTANKING VIEW

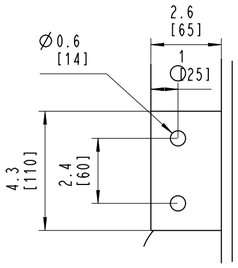

EARTHING TERMINAL
A
1:4

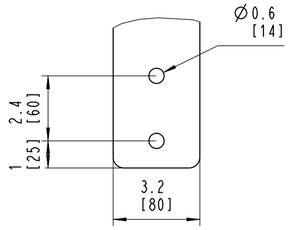

N-PHASE BUSBAR
B
1:4

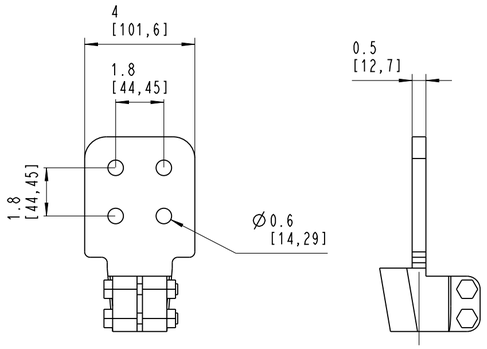

HV CONNECTION FLAG
1:4

Mittapiirustus Mättritning Outline drawing	Nimitys / Benämning / Title: THREE-PHASE OIL-IMMERSED SHUNT REACTOR		Suhde / Skala / Scale: 1:50
Osasto / Avdelning / Department: GES	Teki / Ritad / Drawn: 19.11.2015 V.Appel	Liittyy / Mär till / Concerning: 43109281110	Proj.
ABB		Laji / Typ / Type: KKRU 145 NC 33500	Versio / Version: C
	Tarkasti / Granskad / Checked: O.Takala	A2 Piirustus No. / Ritning Nr. / Document No.: 1ZXY015500B5498	Sivu / Sida / Page: 2
	Hyväksyi / Godkänd / Approved: S.Laine		Kok. / Tot.: 3

133546898-1002-03

We reserve all rights in this document and in the information contained therein. Reproduction, use or disclosure to third parties without express authority is strictly forbidden. © Copyright ABB.

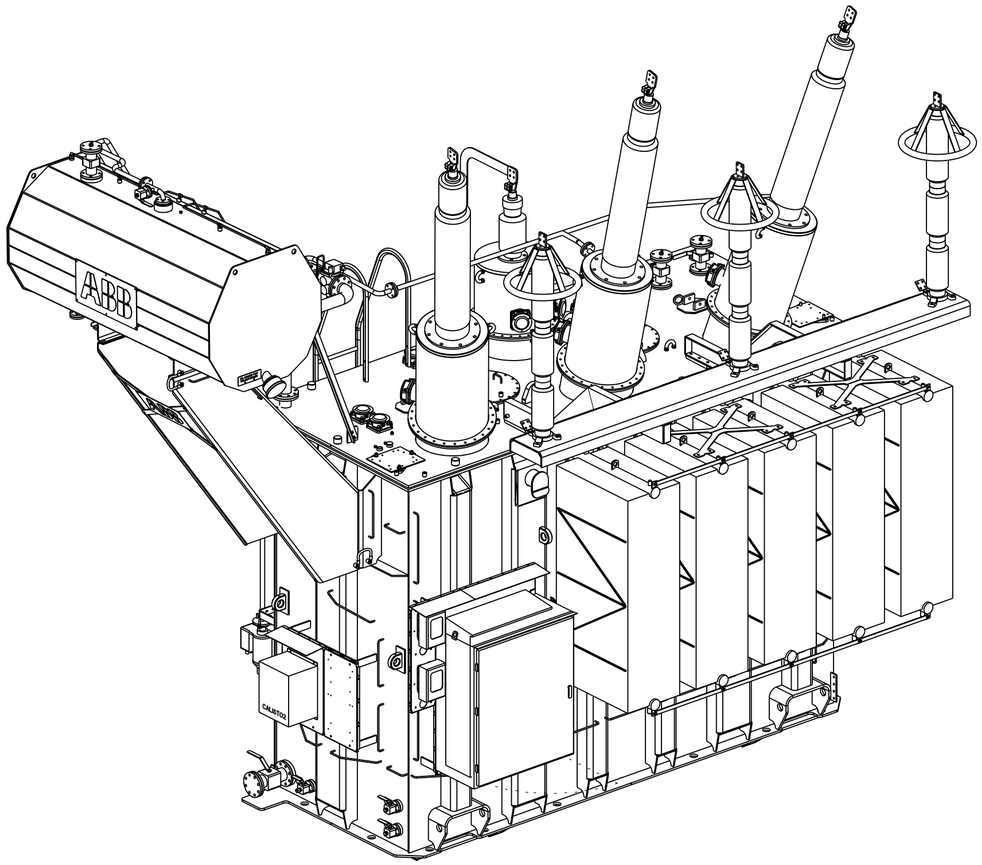

3-D VIEW

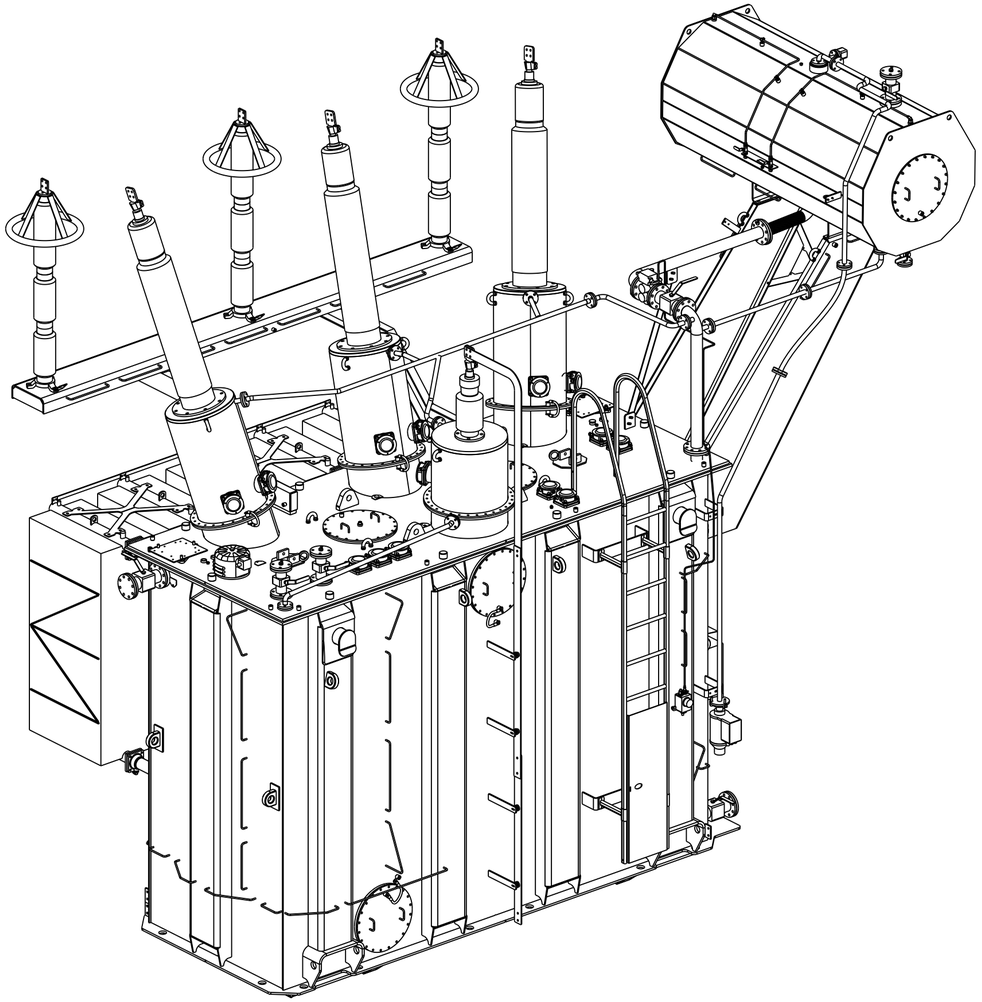

3-D VIEW

Total Weight: 68500 kg
Untanking Weight: 41500 kg

Mittapiirustus Mättritning Outline drawing	Nimitys Benämning Title: THREE-PHASE OIL-IMMERSED SHUNT REACTOR		Suhde Skala Scale 1:XX
Osasto Avdelning Department: GES	Teki Ritad Drawn: 19.11.2015 V.Appel	Liittyy Hör till Concerning: 43109281110	Proj.
ABB		Laji Typ Type: KKRU 145 NC 33500	Versio Version C
	Tarkasti Granskad Checked: O.Takala	A2 Piirustus No. Ritning Nr. Document No.: 1ZXY015500B5498	Sivu Sida Page 3
	Hyväksyi Godkänd Approved: S.Laine		Kok. Tot. 3

1335468898-1003-03