LEDGER M AEC

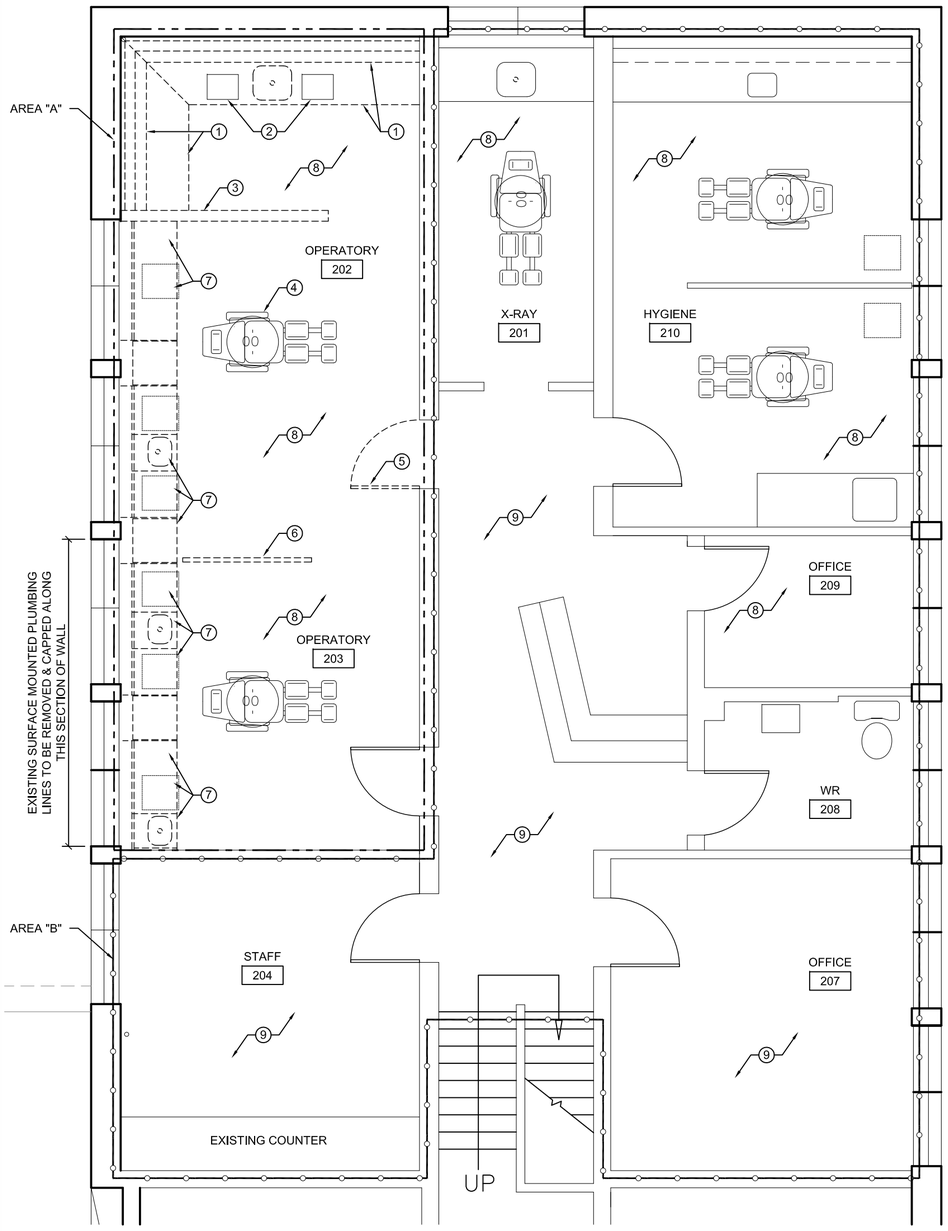

1 A1 A1 DEMOLITION PLAN
SCALE 1:50

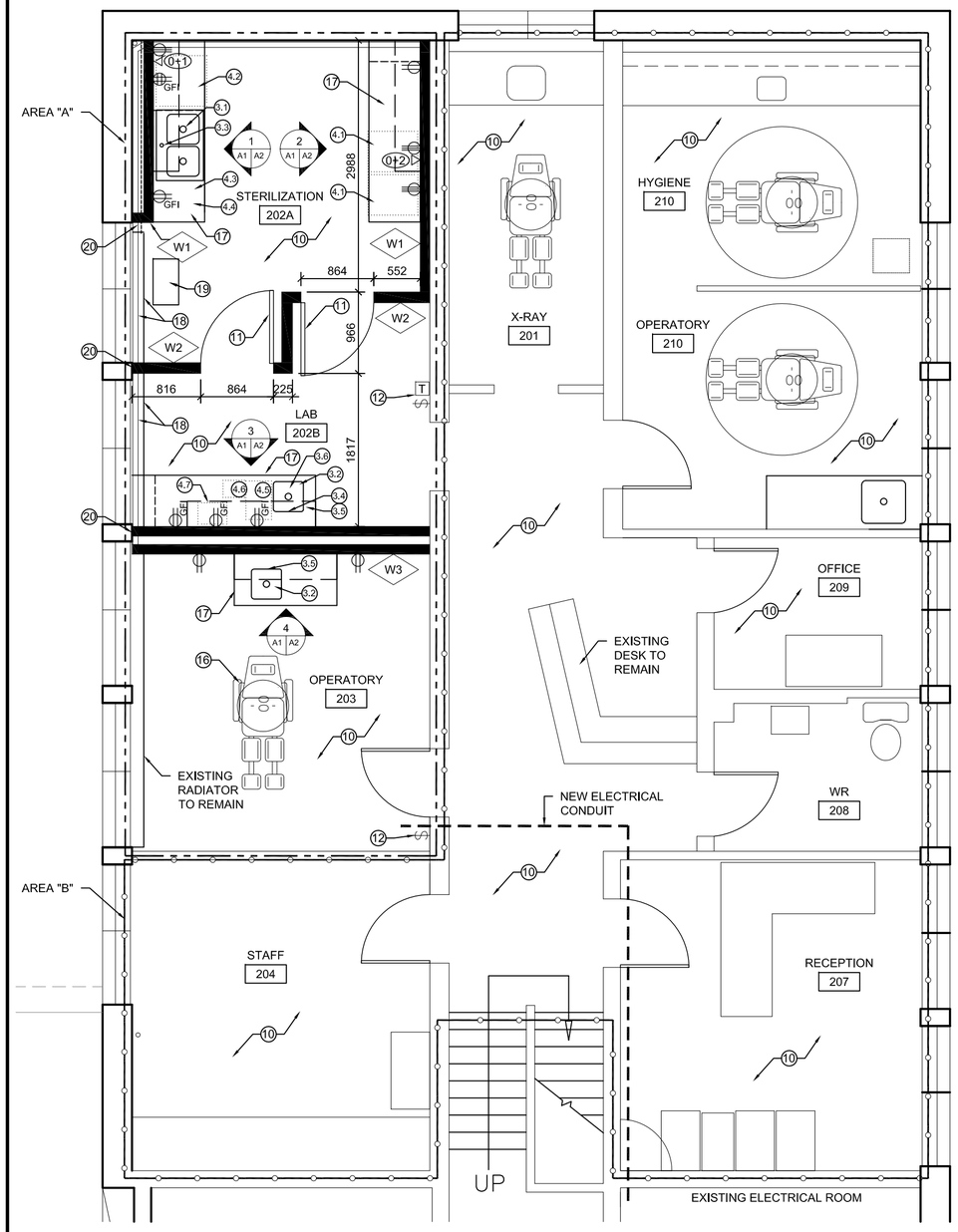

2 A1 A1 NEW FLOOR PLAN - CONSTRUCTION
SCALE 1:50

KEY PLAN:
205 LINDEN AVE, SUMMERSIDE

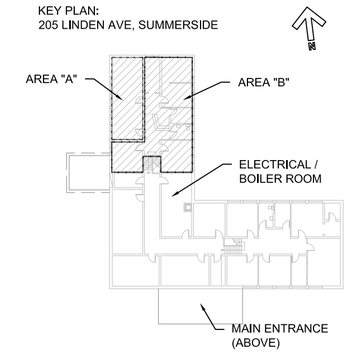

GENERAL NOTES:

1. ALL MEASUREMENTS AND SITE CONDITIONS ARE TO BE CONFIRMED ON SITE BY THE CONTRACTOR. CONTRACTOR IS RESPONSIBLE TO VISIT THE SITE PRIOR TO SUBMITTING A TENDER AND MAKE THEMSELVES FAMILIAR WITH CONDITIONS THAT MAY AFFECT THE WORK.
2. REMOVAL AND DISPOSAL OF DEMOLISHED MATERIALS TO BE IN ACCORDANCE WITH AUTHORITIES HAVING JURISDICTION.
3. CONTRACTOR RESPONSIBLE TO MAKE GOOD ALL AREAS AFFECTED UNDER THIS CONTRACT BACK TO ITS ORIGINAL CONDITION. (MATCH EXISTING)

LEGEND:

- DEMOLITION
- EXTENT OF CONTRACT - AREA "A"
- EXTENT OF CONTRACT - AREA "B"
- DENTAL EQUIPMENT (NIC)
- NEW WALL CONSTRUCTION
- VOICE + DATA LINES
- DUPLEX RECEPTACLE
- 220 VOLT RECEPTACLE
- QUADRUPLEX RECEPTACLE
- GFI GROUND FAULT INTERRUPT RECEPTACLE
- KEY NOTE
- E0 EQUIPMENT NOTE (REFER TO EQUIP. LIST)
- NEW LIGHT FIXTURE

KEY NOTES:

1. EXISTING UPPER AND LOWER CABINETS TO BE REMOVED.
2. ALL EXISTING EQUIPMENT TO BE REMOVED BY OWNER.
3. EXISTING PARTIAL HEIGHT PARTITION TO BE REMOVED.
4. EXISTING DENTAL CHAIR TO BE REMOVED BY OWNER. (TYP.)
5. EXISTING DOOR TO BE REMOVED. FRAME TO REMAIN IN PLACE. CONTRACTOR TO FILL HOLES IN FRAME. SAND AND PAINT FRAME.
6. MOVABLE PARTITION TO BE REMOVED BY OWNER.
7. EXISTING CABINETS, SINKS AND ROLLING CARTS TO BE REMOVED (ENTIRE LENGTH OF WALL). ALL PLUMBING TO BE CAPPED AT WALL.
8. EXISTING ASBESTOS-CONTAINING FLOORING AND ADHESIVE TO BE REMOVED.
9. EXISTING CARPET TO BE REMOVED AND EXISTING ASBESTOS-CONTAINING FLOORING AND ADHESIVE BELOW CARPET TO BE REMOVED.
10. NEW VINYL SHEET FLOORING THROUGHOUT ENTIRE DENTAL SUITE. SEE SPEC. EXISTING TERRAZZO FLOOR IN WASHROOM TO REMAIN.
11. NEW 864x2134 mm SOLID CORE WOOD DOOR C/W STAINLESS STEEL PUSH PLATE, KICK PLATE AND CLOSURE.
12. EXISTING THERMOSTAT, LIGHT SWITCH AND VOLUME CONTROLS TO REMAIN.
13. EXISTING FLUORESCENT LIGHTING FIXTURES TO BE REMOVED.
14. EXISTING HEAT DETECTORS TO BE RELOCATED TO NEW T-BAR CEILING.
15. NEW ACOUSTIC CEILING TILE AND GRID @ 2438mm ABOVE FINISHED FLOOR. SEE SPEC.
16. EXISTING DENTAL CHAIR TO BE REPOSITIONED BY OWNER, WIRED BY CONTRACTOR.
17. NEW MILLWORK. SEE SHEET A2 FOR DETAILS.
18. EXISTING RADIATORS AND PLUMBING LINES TO REMAIN. PAINT TO MATCH NEW WALL COLOUR.
19. NEW 14,000 BTU PORTABLE A/C UNIT C/W WINDOW KIT AND HOSE. STANDARD OF ACCEPTANCE: FRIDGEDAIRE FFPA1422R1 OR APPROVED EQUAL.
20. CUT EXISTING RADIATOR TO ALLOW CONSTRUCTION OF NEW WALL. RADIATOR TO RECEIVE NEW WALL CAPS.

WALL LEGEND:

W1 — WALL CONSTRUCTION
12.5 mm GWB (PRIMED AND PAINTED)
100 mm METAL STUD @ 400 mm O.C.

W2 — WALL CONSTRUCTION
12.5 mm GWB (PRIMED AND PAINTED)
100 mm METAL STUDS @ 400 mm O.C.
BATT SOUND INSULATION
12.5 mm GWB (PRIMED AND PAINTED)

W3 — WALL CONSTRUCTION
12.5 mm GWB (PRIMED AND PAINTED)
100 mm METAL STUDS @ 400 mm O.C.
BATT SOUND INSULATION
100 mm AIR SPACE (FOR PLUMBING)
100 mm METAL STUDS @ 400 mm O.C
BATT SOUND INSULATION
12.5 mm GWB (PRIMED AND PAINTED)

ALL NEW WALLS TO BE CONSTRUCTED TO U/S OF EXISTING CEILING HEIGHT.

PLUMBING NOTES:

1. ALL PLUMBING WORK TO BE COMPLETED BY A LICENSED MECHANICAL CONTRACTOR.
2. CONTRACTOR TO ADD SHUT-OFF VALVES ON EXISTING PLUMBING LINES (IF NONE EXIST) ENTERING THE DENTAL CLINIC TO ALLOW PLUMBING WORK TO TAKE PLACE LIMITING DISRUPTION TO THE OPERATION OF THE ENTIRE BUILDING.
3. PLUMBING FIXTURES:
   - 3.1. DOUBLE SINK - KINDRED MODEL QDL 2031/7 OR APPROVED EQUAL.
   - 3.2. SINGLE SINK - KINDRED MODEL QSL 2217/8 OR APPROVED EQUAL.
   - 3.3. FAUCET C/W FOOT PEDALS - DELTA MODEL 54T5432A-R7 OR APPROVED EQUAL.
   - 3.4. COUNTER MOUNTED EYE-WASH STATION - BRADLEY MODEL S19-270E; LEFT HAND SWING ACTIVATED C/W MIXING VALVE OR APPROVED EQUAL.
   - 3.5. FAUCET - DELTA MODEL 27C4844 CHROME FINISH C/W MIXING VALVE.
   - 3.6. PLASTER TRAP - TRAP-EZE COMPLETE PLASTER TRAP KIT, 3.5 GALLON BY BUFFALO OR APPROVED EQUAL.

ELECTRICAL NOTES:

1. ALL ELECTRICAL WORK TO BE COMPLETED BY A LICENSED ELECTRICAL CONTRACTOR.
2. CONTRACTOR RESPONSIBLE TO RUN ALL NEW ELECTRICAL WIRING BACK TO THE EXISTING PANEL LOCATED IN THE MAIN ELECTRICAL ROOM. CONTRACTOR TO COORDINATE THIS WORK WITH THE TIE REPRESENTATIVE.
3. ALL POWER DISCONNECTS AND RECONNECTS TO HAPPEN AFTER NORMAL WORKING HOURS TO LIMIT DISRUPTION TO THE OPERATION OF THE ENTIRE BUILDING.
4. EQUIPMENT LIST (N.I.C.)
   - 4.1. AUTOCLAVE - 220V, 20amp
   - 4.2. HYDRIM L110W WASHER - DEDICATED 208-240V
   - 4.3. HAND PIECE LUBRICATION - 120V, 20amp
   - 4.4. BIOSONIC CLEANER - 110V
   - 4.5. GRINDER - 110V
   - 4.6. SANDER - 110V
   - 4.7. VIBRATOR - 110V

CONTRACTOR TO PROVIDE REQUIRED POWER FOR ALL EQUIPMENT AS PER MANUFACTURERS INSTRUCTION. OWNER WILL SUPPLY SPEC SHEETS

5. NEW LIGHT FIXTURES TO BE LITHONIA (2X4) AVANTE RECESSED DIRECT/INDIRECT, 2 LAMP, 32W T8, SINGLE BALLAST OR APPROVED EQUAL.
6. DIRECT VENT EXHAUST FAN.
7. ALL NEW ELECTRICAL TO BE FED DOWN NEW WALLS FROM ABOVE NEW CEILING GRID.
8. CONTRACTOR TO RUN NEW ELECTRICAL CONDUIT FROM EXISTING ELECTRICAL ROOM TO ABOVE CEILING IN AREA "A". CONDUIT IN EXISTING OFFICE TO BE SURFACE MOUNTED AS CLOSE TO THE CORNERS AS POSSIBLE. EXPOSED CONDUIT TO BE PAINTED TO MATCH ADJACENT COLOUR.
9. ALL DATA TO BE INSTALLED AS PER THE ITSS CABLING STANDARDS. SEE SPEC.

ISSUED FOR TENDER

Prince Edward Island CANADA
Transportation, Infrastructure and Energy
Tel 902 368 5100
Fax 902 569 0590
http://www.gov.pe.ca/
PO Box 2000
Charlottetown
Prince Edward Island
Canada C1A 7N8

Project Title :
Summerside Public Health Dental Clinic Renovation

Drawing Title :
Demolition & New Floor Plans

Scale : AS NOTED	Design By : TIE
Drawn By : RJS	Date : OCT 2017
Project No.: 4575-17014	Drawing No.: A1 of 3

G:\BLDG-ASSET\BLDGS\4575 SSIDE PUBLIC HEALTH - LINDEN AVE\17014\DWG\4575-17014 - CONSTRUCTION.DWG

LEDGER M AEC

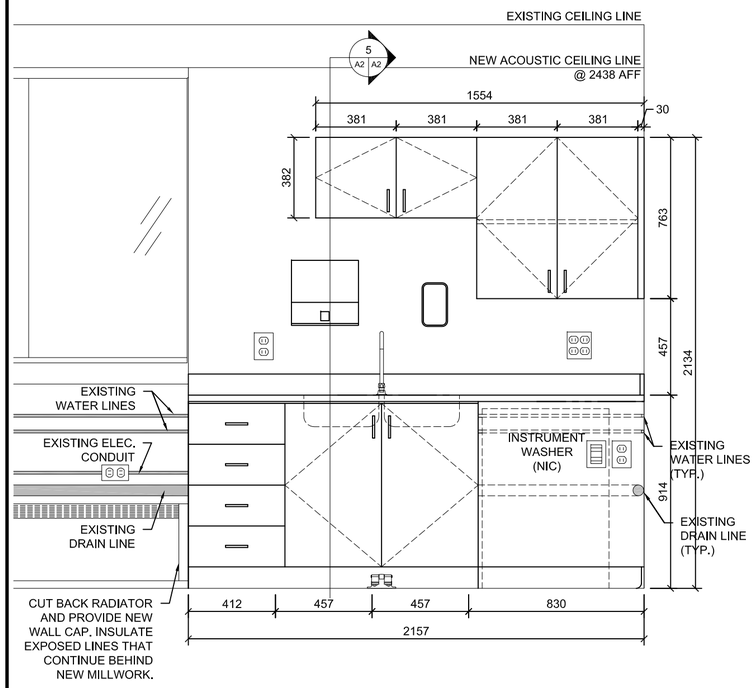

1 A1 A2 STERILIZATION - ELEVATION
SCALE 1:20

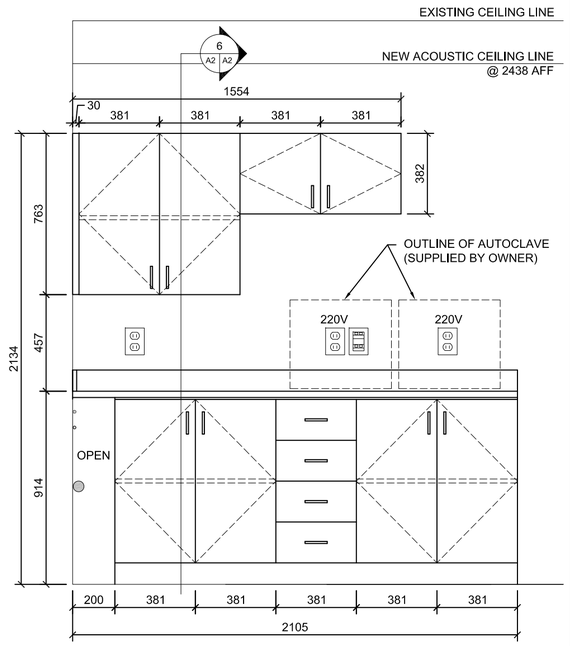

2 A1 A2 STERILIZATION - ELEVATION
SCALE 1:20

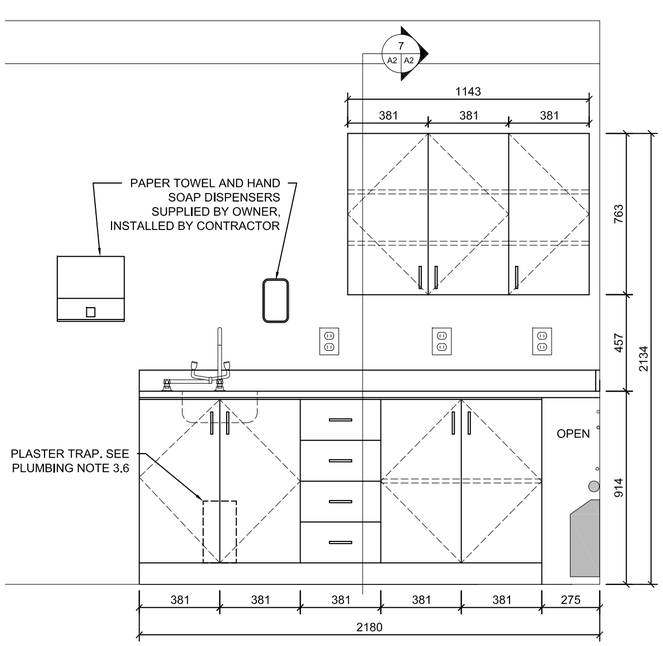

3 A1 A2 LAB - ELEVATION
SCALE 1:20

MILLWORK NOTES:

1. ALL CABINET BASES & UPPERS TO BE CONSTRUCTED w/ 19mm WHITE MELAMINE.
2. ALL DRAWER BOXES TO BE CONSTRUCTED w/ 16mm MELAMINE w/ MELAMINE EDGES .
3. ALL KICK PLATES, DOOR & DRAWER FRONTS TO BE CONSTRUCTED w/ 19mm WHITE MELAMINE c/w P.LAM. FRONTS & EDGES. (COLOUR BY TIE REP.)
4. PILASTER STRIPS TO BE DADOED INTO MILLWORK.
5. ALL MILLWORK TO BE CONSTRUCTED AS INDICATED ABOVE UNLESS OTHERWISE NOTED ON DRAWINGS OR IN SPECIFICATION.
6. REFER TO SPECIFICATION FOR HARDWARE.

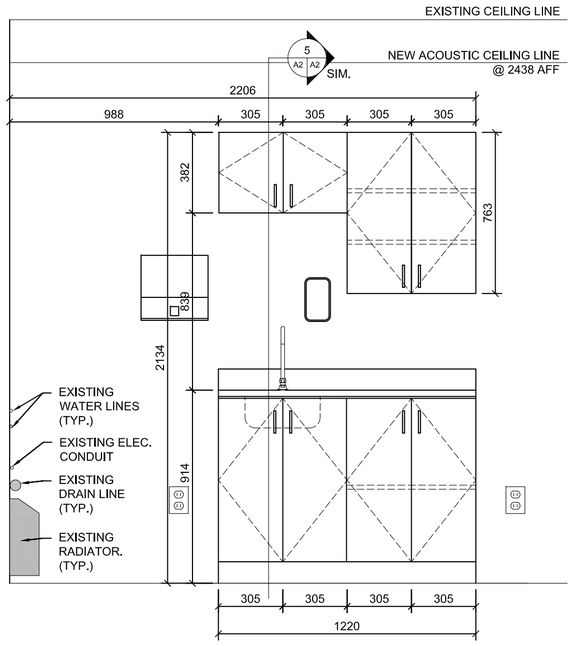

4 A1 A2 OPERATORY - ELEVATION
SCALE 1:20

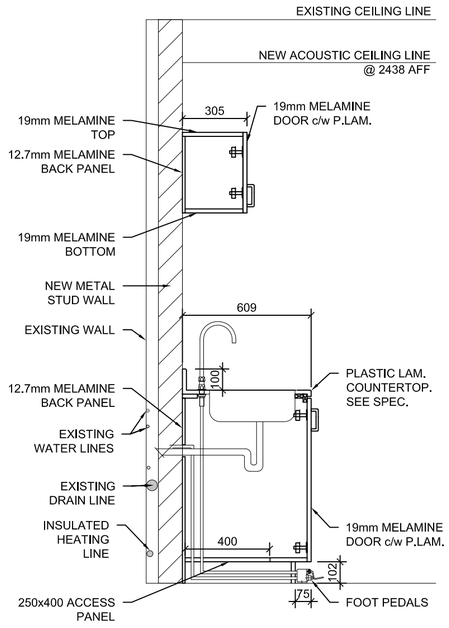

5 A2 A2 CABINET - SECTION
SCALE 1:20

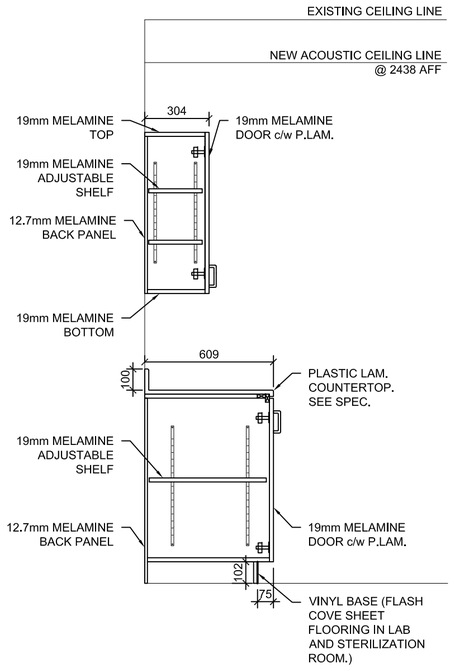

6 A2 A2 CABINET - SECTION
SCALE 1:20

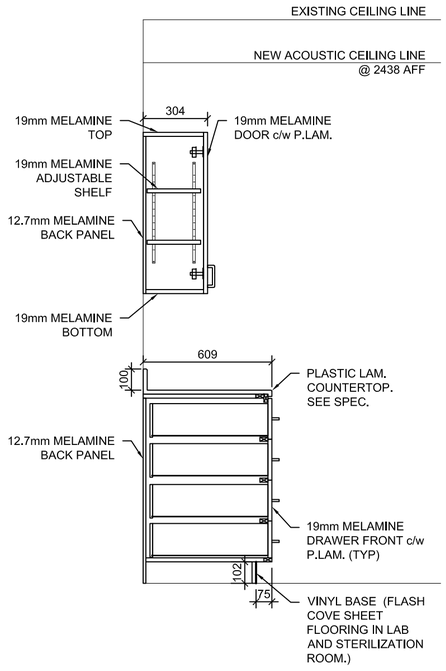

7 A2 A2 CABINET - SECTION
SCALE 1:20

ISSUED FOR TENDER

Prince Edward Island CANADA
Transportation, Infrastructure and Energy
Tel 902 368 5100
Fax 902 569 0590
http://www.gov.pe.ca/
PO Box 2000
Charlottetown
Prince Edward Island
Canada C1A 7N8

Project Title :
Summerside Public Health Dental Clinic Renovation

Drawing Title :
Millwork Details

Scale : 1:20	Design By : TIE
Drawn By : RJS	Date : OCT 2017
Project No.: 4575-17014	Drawing No.: A2 of 3

C:\BLDG ASSETS\BLDGS\4575 SSIDE PUBLIC HEALTH - LINDEN AVE\17014\DWG\4575-17014 - CONSTRUCTION.DWG

LEDGER M AEC

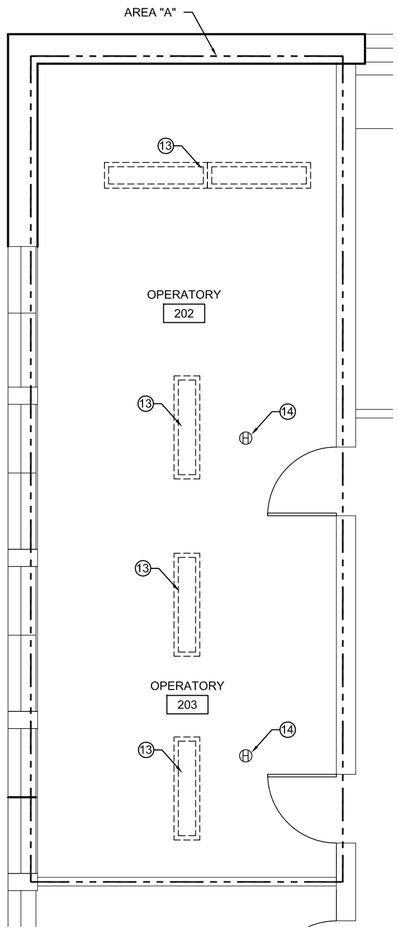

1 A3 A3 EXISTING REFLECTED CEILING PLAN
SCALE 1:50

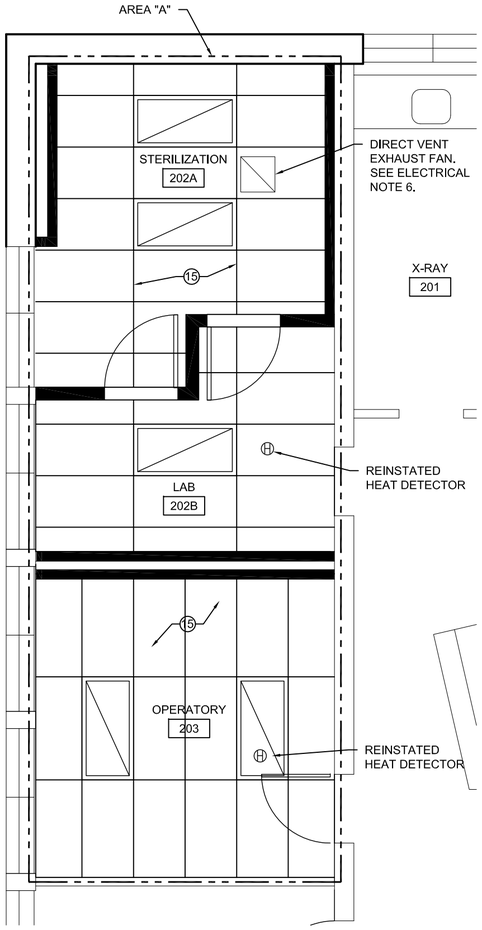

2 A3 A3 NEW REFLECTED CEILING PLAN
SCALE 1:50

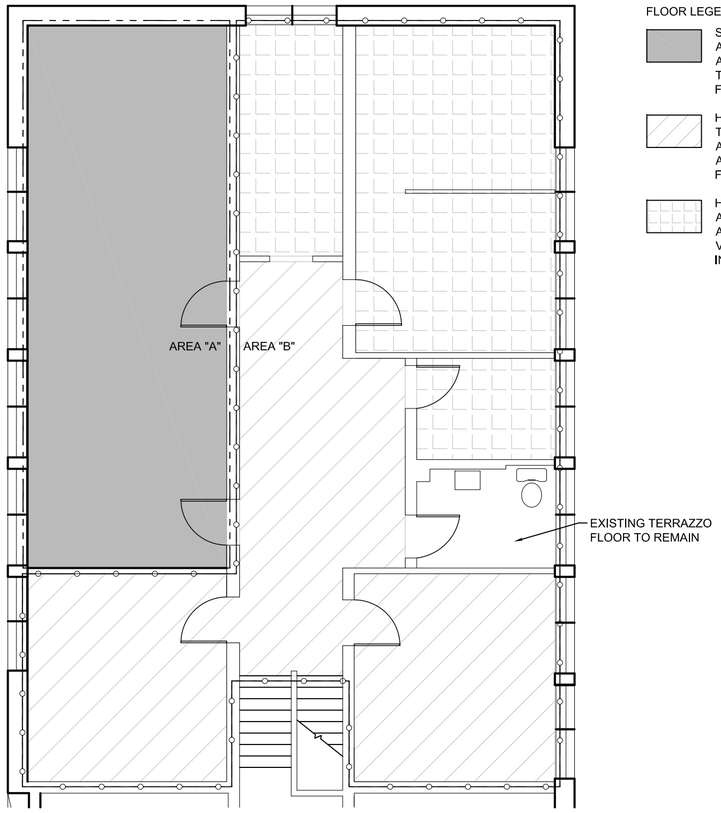

FLOOR LEGEND:

- SHADING INDICATES AREA OF ASBESTOS CONTAINING FLOOR AND ADHESIVE TO BE REMOVED AS PART OF THE CONTRACT. NEW VINYL SHEET FLOORING TO BE INSTALLED.
- HATCHING INDICATES AREA OF CARPET TO BE REMOVED ALONG WITH THE ASBESTOS CONTAINING TILE FLOOR AND ADHESIVE. NEW VINYL SHEET FLOORING TO BE INSTALLED.
- HATCHING INDICATES AREA OF ASBESTOS CONTAINING FLOOR TILE AND ADHESIVE TO BE REMOVED. NEW VINYL SHEET FLOORING TO BE INSTALLED.

3 A3 A3 FLOORING SCHEDULE
SCALE 1:75

LEGEND:

- DEMOLITION
- EXTENT OF CONTRACT - AREA "A"
- EXTENT OF CONTRACT - AREA "B"
- DENTAL EQUIPMENT (NIC)
- NEW WALL CONSTRUCTION
- 0+2 VOICE + DATA LINES
- DUPLEX RECEPTACLE
- 220 VOLT RECEPTACLE
- QUADRUPLEX RECEPTACLE
- GFI GROUND FAULT INTERRUPT RECEPTACLE
- 00 KEY NOTE
- E0 EQUIPMENT NOTE (REFER TO EQUIP. LIST)
- NEW LIGHT FIXTURE

ISSUED FOR TENDER

Prince Edward Island CANADA

Transportation, Infrastructure and Energy

Tel 902 368 5100
Fax 902 569 0590
http://www.gov.pe.ca/

PO Box 2000
Charlottetown
Prince Edward Island
Canada C1A 7N8

Project Title :
Summerside Public Health Dental Clinic Renovation

Drawing Title :
Reflected Ceiling Plans & Paint and Flooring Schedule

Scale : AS NOTED	Design By : TIE
Drawn By : RJS	Date : OCT 2017
Project No.: 4575-17014	Drawing No.: A3 of 3

C:\BLDG-ASSET\BLDGS\4575 SSIDE PUBLIC HEALTH - LINDEN AVE\17014\DWG\4575-17014 - CONSTRUCTION.DWG