GENERAL NOTES:

1. ALL MEASUREMENTS AND SITE CONDITIONS ARE TO BE CONFIRMED ON SITE BY THE CONTRACTOR. CONTRACTOR IS RESPONSIBLE TO VISIT THE SITE PRIOR TO SUBMITTING A TENDER AND MAKE THEMSELVES FAMILIAR WITH CONDITIONS THAT MAY AFFECT THE WORK.

2. CONTRACTOR RESPONSIBLE TO MAKE GOOD ALL AREAS AFFECTED UNDER THIS CONTRACT BACK TO ITS ORIGINAL CONDITION. (MATCH EXISTING)

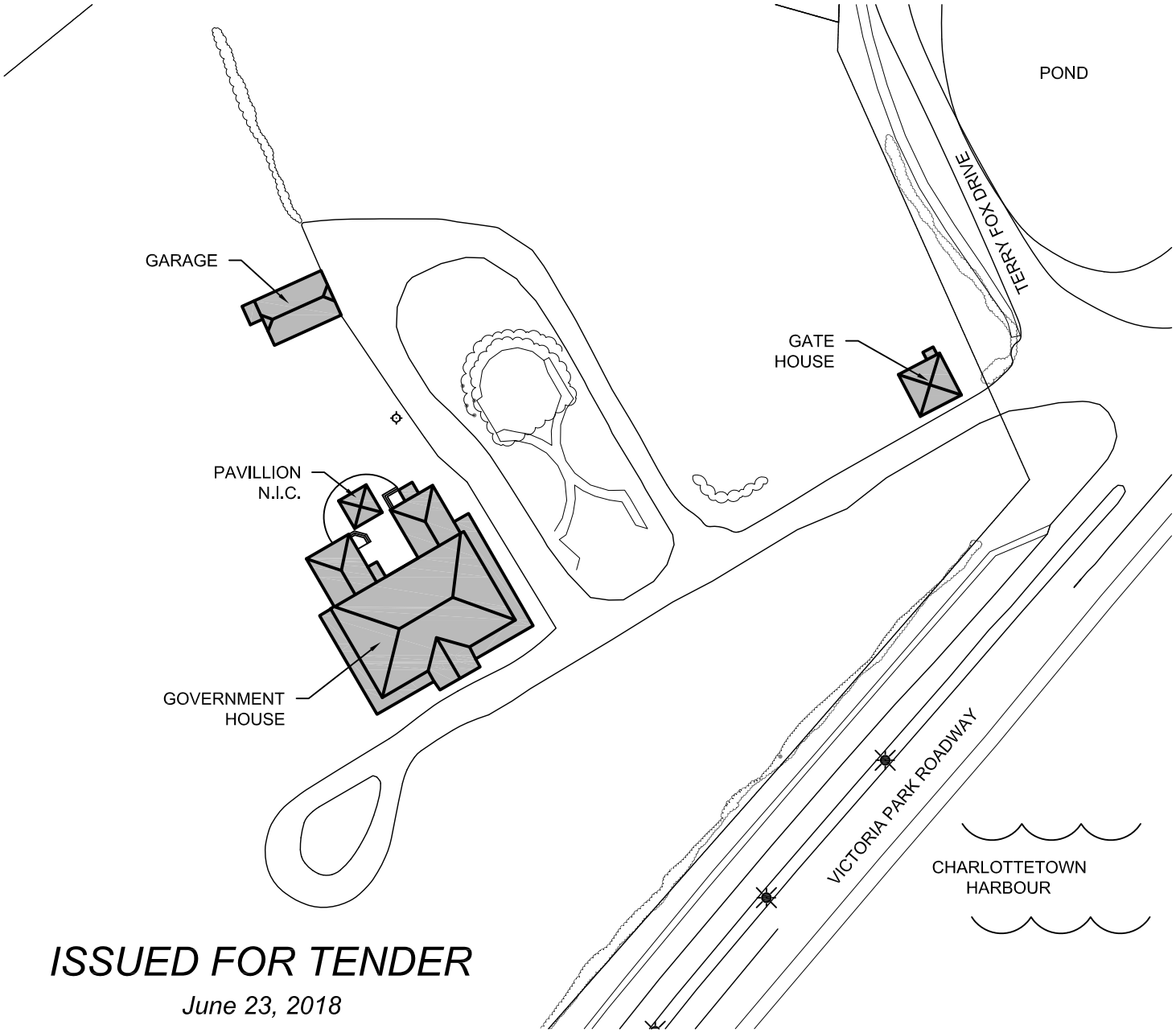

ISSUED FOR TENDER

June 23, 2018

Project Title:	Drawing Title:
Government House - Exterior Painting	*Site Plan*

Prince Edward Island CANADA	Date:	Dsgn By:	Drn By:	Scale:	Proj No.:	Dwg No.:
	June, 2018	TIE	JWG	N.T.S.	*2475 - 18024*	*A1 of 4*

G:\BLDG ASSET\2475 GOVERNMENT HOUSE\18024 EXTERIOR PAINTING\04 PLANS & DRAWINGS\2475-18024.DWG

ELEVATION 1

KEY PLAN:
GOVERNMENT HOUSE

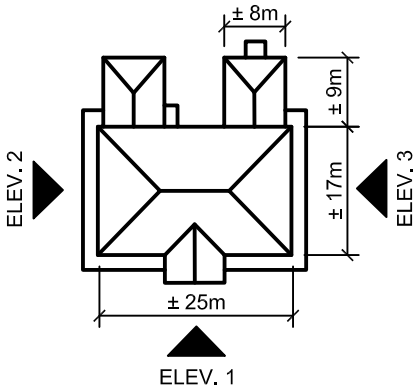

ELEVATION 2

DETAIL - WOOD WORK @ VERANDA

ELEVATION 3

ISSUED FOR TENDER

June 23, 2018

Project Title:	Drawing Title:
Government House - Exterior Painting	*Government House Key Plan & Photos*

Prince Edward Island CANADA	Date:	Dsgn By:	Drn By:	Scale:	Proj No.:	Dwg No.:
	June, 2018	TIE	JWG	N.T.S.	*2475 - 18024*	*A2 of 4*

G:\BLDG ASSET\2475 GOVERNMENT HOUSE\18024 EXTERIOR PAINTING\04 PLANS & DRAWINGS\2475-18024.DWG

ELEVATION 4

KEY PLAN:
GOVERNMENT HOUSE

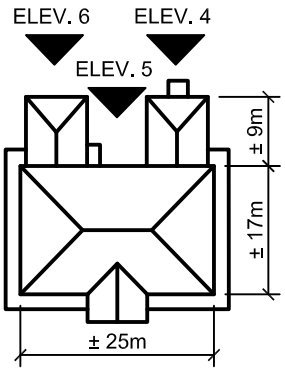

ELEVATION 5

ELEVATION 6

ELEVATION 7 - ALL SIDES TO BE COMPLETED

KEY PLAN:
GATE HOUSE

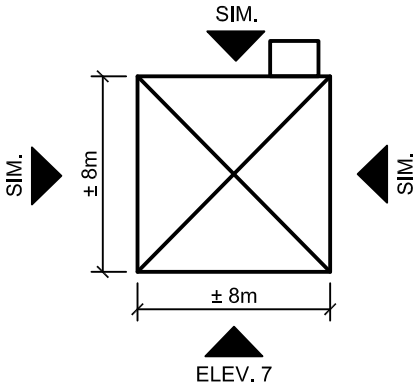

ISSUED FOR TENDER

June 23, 2018

Project Title:	Drawing Title:
Government House - Exterior Painting	*Government House & Gate House Key Plans & Photos*

Prince Edward Island CANADA	Date:	Dsgn By:	Drn By:	Scale:	Proj No.:	Dwg No.:
	June, 2018	TIE	JWG	N.T.S.	*2475 - 18024*	*A3 of 4*

G:\BLDG ASSET\2475 GOVERNMENT HOUSE\18024 EXTERIOR PAINTING\04 PLANS & DRAWINGS\2475-18024.DWG

ELEVATION 8

KEY PLAN:
GARAGE

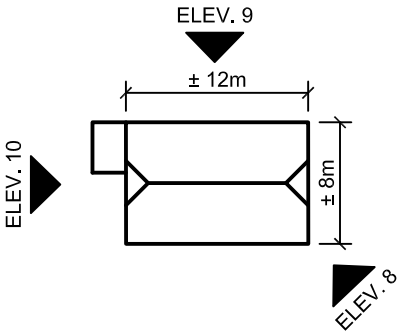

ELEVATION 9

ELEVATION 10

ISSUED FOR TENDER

June 23, 2018

Project Title:	Drawing Title:
Government House - Exterior Painting	*Garage Key Plan & Photos*

Prince Edward Island CANADA	Date:	Dsgn By:	Drn By:	Scale:	Proj No.:	Dwg No.:
	June, 2018	TIE	JWG	N.T.S.	*2475 - 18024*	*A4 of 4*

G:\BLDG ASSET\2475 GOVERNMENT HOUSE\18024 EXTERIOR PAINTING\04 PLANS & DRAWINGS\2475-18024.DWG